926022

0303D
6202D

系列
SERIES

直驱上下复合送料
自动剪线平缝机

使用说明/零件手册

目　　录 CONTENT

使用说明 Operation Instruction

1、机器简介 Brief introduction 1
2、主要技术规格 Machine specification 1
3、安装油盘 Installing the motor 1
4、安装机头 Installing the machine head 2
5、安装膝控装置.控速器踏板拉力的调整 Installing the knee lifter assy. Speed adjustment 2
6、调整膝控装置 Adjusting the knee lifter 3
7、润滑 Lubrication 3
8、试车 Test operation 4
9、安装机针 Installing the needle 5
10、装卸梭芯套 Removing the bobbin case 5
11、绕取梭芯线 Winding the bobbin thread 5
12、穿底线 Threading the bobbin thread 6
13、穿面线 Threading the needle thread 6
14、调节针距 Adjusting the stitch length 7
15、缝纫及倒缝 Sewing and backtacking 7
16、调节线的张力 Adjusting the thread tension 8
17、调节压脚压力 Adjusting the presser foot pressure 8
18、调节剪线后线头的长度 Adjusting the trailing length after thread trimming 9
19、调节挑线簧 Adjusting the thread tension spring 9
20、调节机壳线勾 Adjusting the upper thread guide 10
21、调节压脚高度 Adjusting the presser foot height 10
22、调节送布牙高度 Adjusting the feed dog height 10
23、调节送布牙的角度 Adjusting the feed dog angle 11
24、调节倒顺缝针距误差 Adjusting the difference of stitch length between the forward and backtacking 11
25、调节松线器的挺线 Adjusting the tension release 11
26、调节机针与送布机构同步 Adjusting the timing of needle and feed mechanism 12
27、调节旋梭油量 Adjusting the rotary hook lubrication amount 12
28、调整针杆高度与旋梭同步 Adjusting the height of needle bar and the timing with hook 13
29、调节油泵供油 Adjusting the oil pump 13
30、调节摆压脚与小压脚交替提升量 Adjusting the lifting amount of presser feet 14
31、剪线装置的调整 Adjusting the trimming mechanism 15-16
32、清扫 Clean 17

零件手册 Parts Manual

1、机壳部件 Casting mechanism ..... 18 - 19
2、针杆挑线部件 Needle bar and thread take-up mechanism ..... 20 - 21
3、压脚部件 Presser foot mechanism ..... 22 - 23
4、送料部件 Feed mechanism ..... 24 - 27
5、上送料部件 Upper feed mechanism ..... 28 - 29
6、旋梭部件 Hook mechanism ..... 30 - 31
7、供油润滑部件 Lubrication mechanism ..... 32 - 33
8、剪线部件 Thread trimming mechanism ..... 34 - 35
9、倒缝部件 Reverse stitching mechanism 36-37
10、GC0303D2附件 Accessories 38-39
11、GC0313D2附件 Accessories 40-41

1.机器简介 Brief introduction

0303D / 0313D 型直驱中厚料上下送料自动剪线平缝机系单直针,采用连杆式送料,连杆挑线机构,旋梭勾线,形成301线迹.

本机采用油泵自动润滑,运转轻滑,噪音低,振动小,特别适用于缝制皮革,帆布,厚重装饰布,织带类织物,如:箱包,汽车座垫,帐篷,沙发等.

电脑控制的剪线、定针数、定针位功能,准确可靠.

This machine is designed with link type feed mechanism and link lever thread take-up mechanism and full lubrication by pump. It's suitable for sewing leather, canvas and other heavy weight materials, such as suitcase, car seat; tent, sofa, etc.
It's reliable and accurate on such functions as thread trimming, needle positioning, etc.

2.主要技术规格 Main specifications

型 号		0303D / 0313D
缝 料		中厚料
最高转速		2000针/分
最大针距		8mm
针杆行程		37mm
压脚交互量		3.5-5.5mm
采用机针		DP×17 23#
压脚提升高度	手控	8mm
	膝控	16mm
采用旋梭		自动润滑大旋梭
供油方式		全自动供油
电机功率		750W

Applications		Medium & heavy weight materials
Max sewing speed		2000 s.p.m
Max stitch length		8mm
Needle bar stroke		37mm
Lifting amount of presser feet		3.5-5.5mm
Needle		DP×17 23#
Presser foot lifting height	By hand	8mm
	By knee	16mm
Hook		Large lubrication hook
Lubrication		Automatic lubrication
Motor power		Servo motor

3.安装油盘 (图1 Installing the oil pan (Fig.1)

1.将机头防震块❷(两个)插进油盘❶前方的角内。
2.将机头防震块❸(两个)插进油盘❶后方的角内。
3.水平地将油盘❹嵌在台板的框孔内。
4.将两个机壳铰链套❺放入台板的凹槽内。

1.Insert the two head cushion ② into the front corners of the oil pan ①;
2.Insert the two head cushion ③ into the back corners of the oil pan ①;
3.Place the oil pan ④ into the cutouts of table;
4.Insert the two rubber cushion ⑤ into the notches of table.

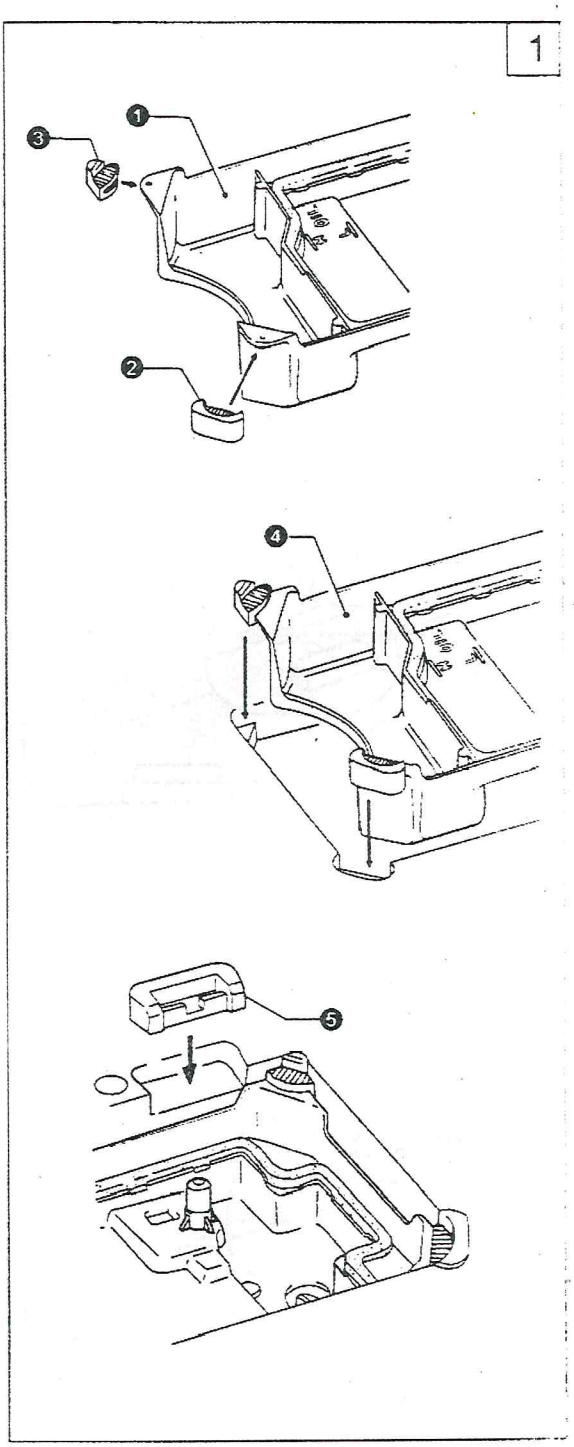

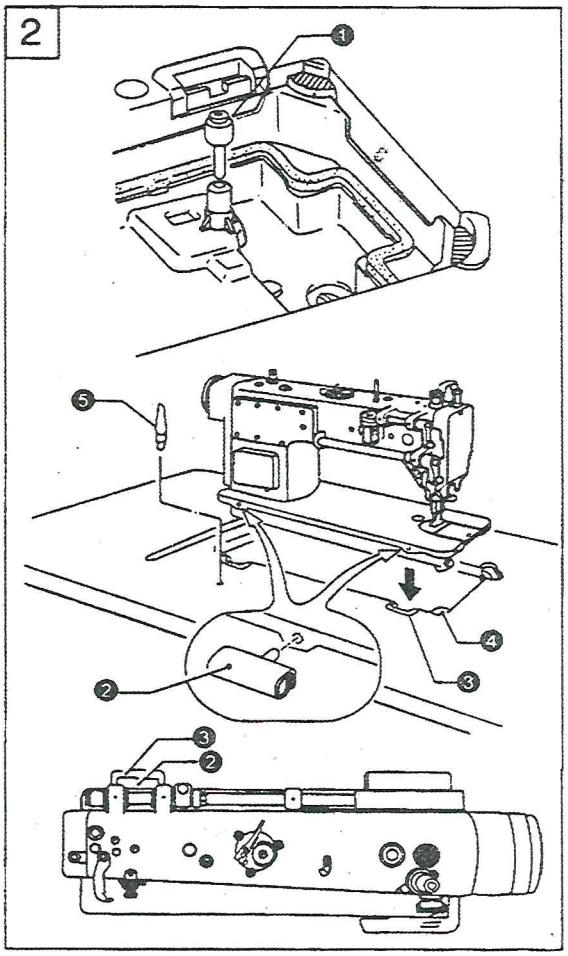

4.安装机头 (图2) Installing the machine head (Fig.2)

1.插入膝控提升顶杆 ❶ 。

1.Insert the knee lifter lifting bar ①.

2.将两个机壳铰链 ❷ 插入机头平板的两孔内。
2.Insert the two hinges ② into the holes in the machine bed.

3.将机头上的铰链勾住台板上的铰链套 ③
平稳地将机头放入台板的框孔 ④ 中。
3.Clamp the two hinges onto the rubber cushions ③ in the work table, and the place the machine head onto the head cushions ④ which are on the top of the oil pan corners.

4.将机头撑杆 ❺ 插入孔中。
4.Tap the rest bar ⑤ into the table hole.

注意：确保机头撑杆插入孔中。
如撑杆未插到最低位置，放入机头时，
机头将发生倾倒，这样比较危险。

NOTE: Tap the rest bar securely into the table hole, if not, the machine head will not be safe when it is tilted back.

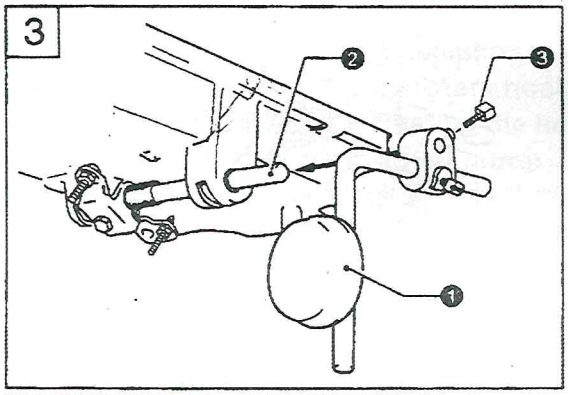

5.安装膝控装置 (图3) Installing the knee lifter assy. (Fig.3)

将膝控碰块 ❶，弯杆及接头插入铰链轴 ❷ 中，稍微拧紧螺钉 ❸ 。

Insert the knee lifter assy. ① into the shaft ② under the oil pan, and slightly tight the screw ③.

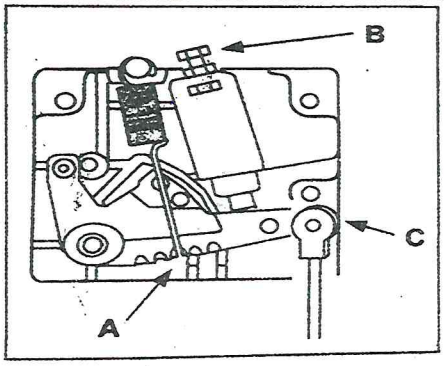

控速器踏板拉力的调整

The adjustment of the controller pedal's tension

A：前踏拉力弹簧
B：后踏紧度制退的调整螺丝组
C：踏板旋臂拨杆挂钩孔

A：Forward step tension spring
B：Back step the screw sets for adjusting the tightness
C：The pothook hole of pedal's slewing shifter lever

6.调整膝控装置(图4) Adjusting knee lifter(Fig.4)

1.转动压脚提升扳手❶将压脚❷完全放下。

2.松开螺母❸。

3.拧紧螺钉❻调节膝控限位架，使之转动2mm。

4.拧紧螺母❸。

5.松开螺母❼。

6.拧动螺钉❽，使该螺钉的末端至膝控限位架之间的长度达到8mm。

7.通过转动螺钉❽并操作膝控碰块，可以使压脚底面至针板的距离在16mm之内得到调整。

8.调节完成后，拧紧螺母❼。

1.Lower the presser foot ② by turning the presser foot bar lifter ①.
2.Loosen the nut ③.
3.Turn the screw ⑥ to adjust the bracket ⑤ to 2mm play.
4.Securely tighten the nut ③.
5.Loosen the nut ⑦.
6.Turn the screw ⑧ until the distance between the end of the screw and bracket is approximately 8mm.
7.Turn the adjusting screw ⑧ to adjust, so that the presser foot is at the desired position within a distance of 16mm above the needle plate when the knee lifter plate ④ is fully pressed.
8.After adjustment, tighten the nut ⑦.

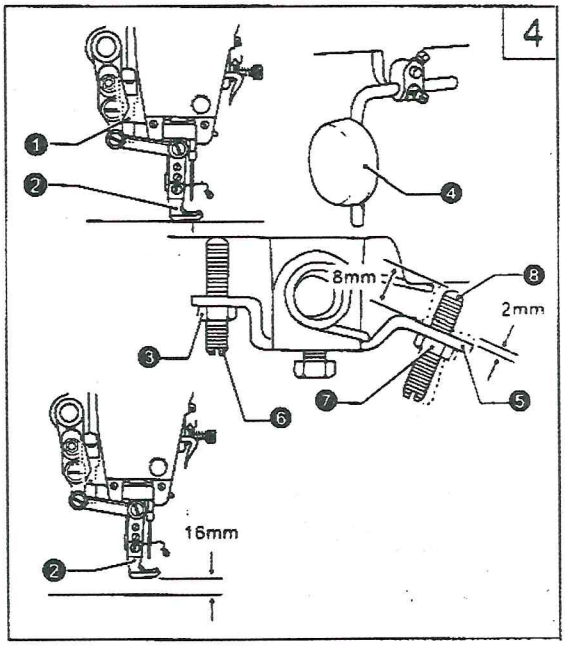

7.润滑 (图5) Lubrication(Fig.5)

1.油量，油量必须按油盘内标记加注，图中标记（A）是油量最高位，（B）是油量最低位。注意油量不得低于标记（B）否则缝纫机各部位就会出现进油停止，造成发热咬死等情况。

2.加油，必须使用18#高速缝纫机油，运转前油量加至标记（A）。

3.换油，1旋下放油螺钉（C），排净废油。新油。2扫清油盘污尘，旋紧放油螺钉（C），加注

1.Oil amount
Please fill the oil according to the mark indicated on the oil pan. Mark (A) means the highest position. Mark (B) means the lowest position. If the oil amount is lower than the Mark (B), oil will not be pumped and machine will be jammed.
2.Fill the oil
Please fill the 18# sewing oil into the oil pan until to the Mark (A)
3.Change the oil
1.Uninstall the screw (C), and drain out the used oil
2.Clean the oil pan, and tighten the screw (C), fill the fresh oil again according the requirement.

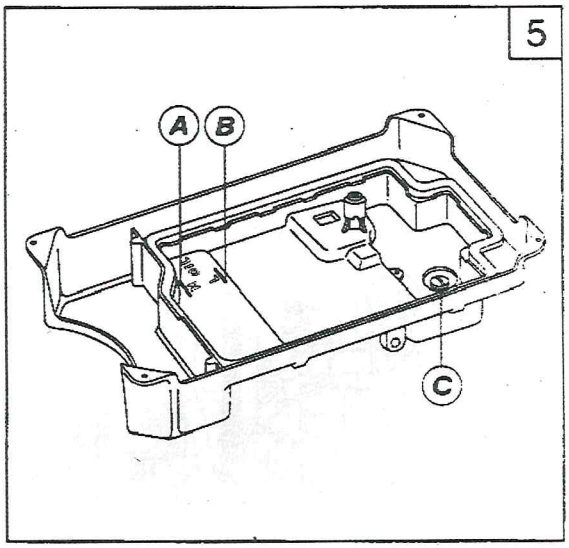

6

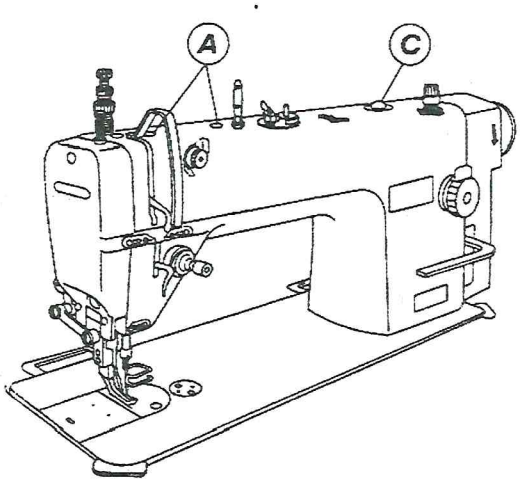

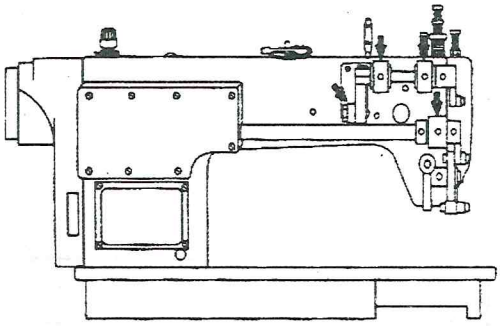

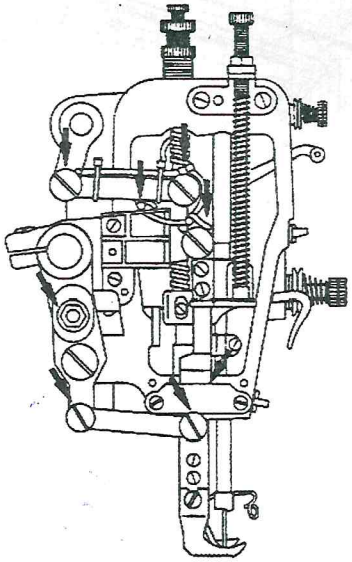

8.试车（图6）Test operation(Fig.6)

新机器在开始使用和长期搁置重新使用时，先卸下机头上部的橡皮塞（A）和面板，按图示的位置充分加油，然后装上面板，抬起压脚进行低速运转1000～1500针／分，并观察油窗（C）的喷油情况，润滑正常后，仍须保持低速30分钟的运转试验，以后逐步提高缝纫速度；经过一个月左右的使用，使机器充分跑合。然后根据工作的性质再提高到一定缝速。

Carry out the test operation when start up a new sewing machine for the first time, or restart after a long period of non-use.
Remove the rubber cap (A) on the top of the arm and face plate, fully lubricate the parts showed by the arrows.
Install the face plate again, lift the presser foot and operate the machine at a lower speed of 1000-1500spm, and observe the oil running through the oil gauge window.
After one month, then the speed can be increased according to the different sewing operation.

9.安装机针（图7）Installing the needle (Fig. 7)

1.转动上轮使机针上升至最高位置。

2.旋松夹针螺钉❷。

3.将机针❸直线插入到底（碰到针杆孔的底部为止），确保长槽向左，然后拧紧螺钉❷。

1.Turn the machine pulley to move the needle bar ① to its highest position;
2.Loosen the screw ②
3.Insert the needle ③ in a straight line as far as it will go, making sure that the long groove on the needle is at the left, and then securely tighten the screw ②

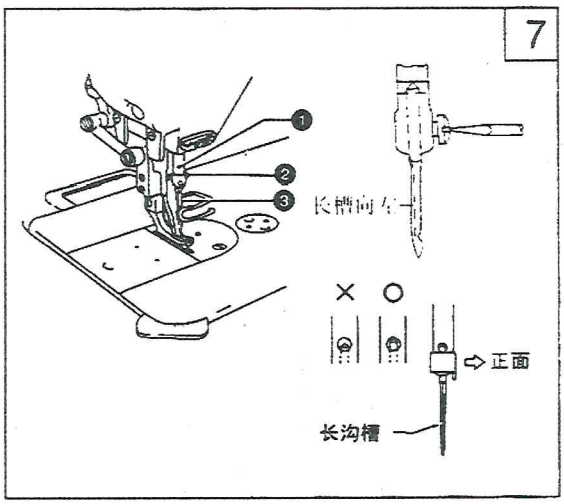

10.装卸梭芯套（图8）Removing the bobbin case(Fig. 8)

1.装梭心套的时候，机针应该在最高位置。先拉开梭门盖❶，之后把梭心套放入旋梭中。放入时请注意梭心套上的定位板是否已经和旋梭心轴上的定位槽相扣合。

2.卸梭心套时，必须将梭门套向外扳开并且扳足，之后捏着扳开的梭门盖徐徐地取下梭心套，如此才能使梭心套钩住梭心，不让梭心脱落。

1.Turn the machine pulley to lift the needle bar to its highest position. Pull the latch ① of the bobbin case upward and then put the bobbin into the bobbin case, finally insert the complete bobbin case with bobbin into the hook shaft.
2.To remove the bobbin case, pull the latch and draw the bobbin case out of the hook.

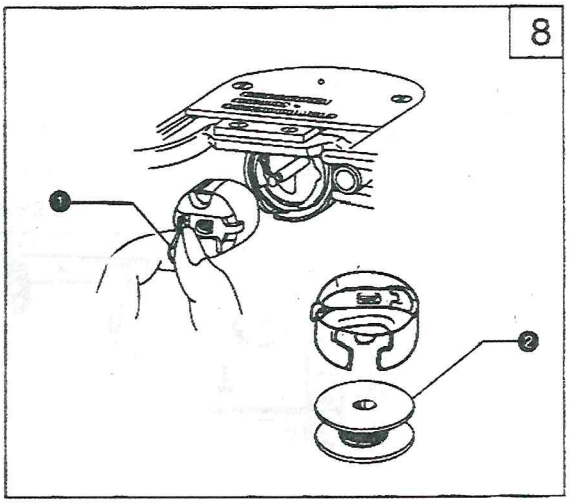

11.绕取梭芯线（图9）Winding the bobbin thread (Fig. 9)

1.打开电源。
2.将梭芯插入绕线轴❷的底部。
3.根据箭头所示的方向，先将线在梭芯上绕几圈。
4.扳动绕线摆杆❸。
5.将压脚抬起来。
6.踩下踏板，便开始自动绕底线了。
7.当梭芯绕满后，绕线摆杆❸便会自动复位。
★如果梭芯线排列不齐，可以通过松开过线架螺钉❹及移动绕线摆杆❸的位置进行调节。
★绕线量由满线跳板上的满线度调节螺钉❻加以调节。
注意：适当的绕线量为平行绕线至梭心外径的80%。

1.Turn the power on;
2.Place the bobbin ① onto the bobbin winder shaft ②;
3.Wind the thread several circles around the bobbin in the direction indicated by arrow;
4.Push down the bobbin presser arm ③;
5.Lift the presser foot;
6.Depress the treadle, the winding operation will start;
7.Once finished, the bobbin presser arm ③ will recover automatically.
＊If the thread winding is not neat and even, loosen the screw ④ to adjust the position of bobbin winder base.
＊Turn the screw ⑥ to adjust the bobbin winding amount
● Tighten the screw to increase the winding amount;
● Loosen the screw to decrease the winding amount.
Note:
The proper winding amount should be around 80% of the bobbin capacity.

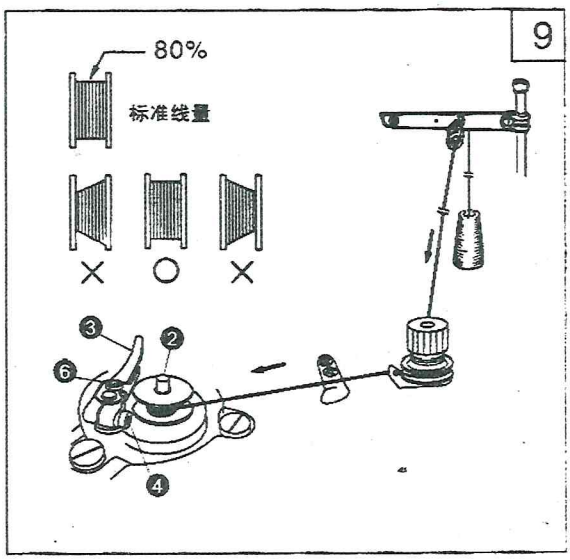

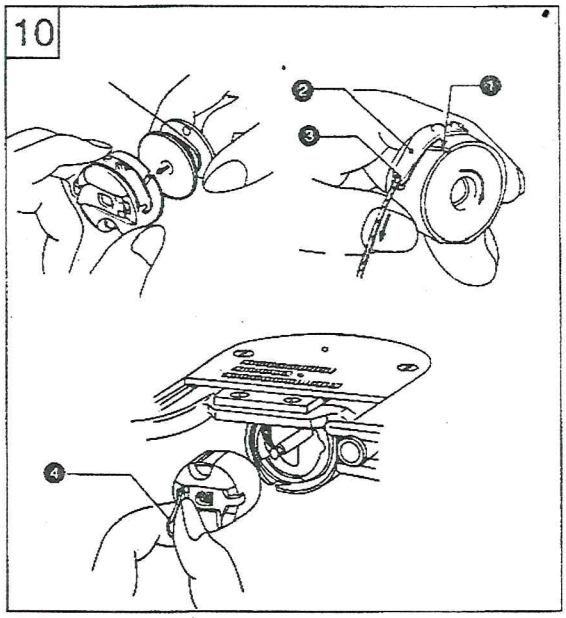

12.穿底线(图10)Threading the bobbin thread (Fig.10)

1.转动上轮使机针上升至最高位置。

2.梭芯线应为右捻线，然后将梭芯装入梭芯套中。

3.捏着线头使其嵌入梭芯套开口槽❶中，经过梭皮簧❷顶端叉口❸中间拉出线头。

4.当牵引线时，梭芯应是顺时针转动。

5.扳开梭门盖❹，将梭芯套装入旋梭中（放入时请注意梭芯套上的定位板是否已经和旋梭芯轴上的定位槽相扣合。）

1.Turn the machine pulley to lift the needle to its highest position;

2.The bobbin thread should be right twist, place the bobbin into the bobbin case;

3.Pass the thread through the slot ① and spring plate ②, and finally pull it out of the notch ③;

4.Check that the bobbin should turn clockwise if the thread is pulled;

5.Hold the latch ④, and place the bobbin case in the hook.

13.穿面线(图11)Threading the needle thread (Fig.11)

在穿面线之前请让挑线杆上升至最高位置，这样便于穿线并可防止开始缝纫时发生面线从针孔中脱落。

Raise the thread take-up lever to its highest position. This will make threading easier and will prevent the thread from coming out at the sewing start.

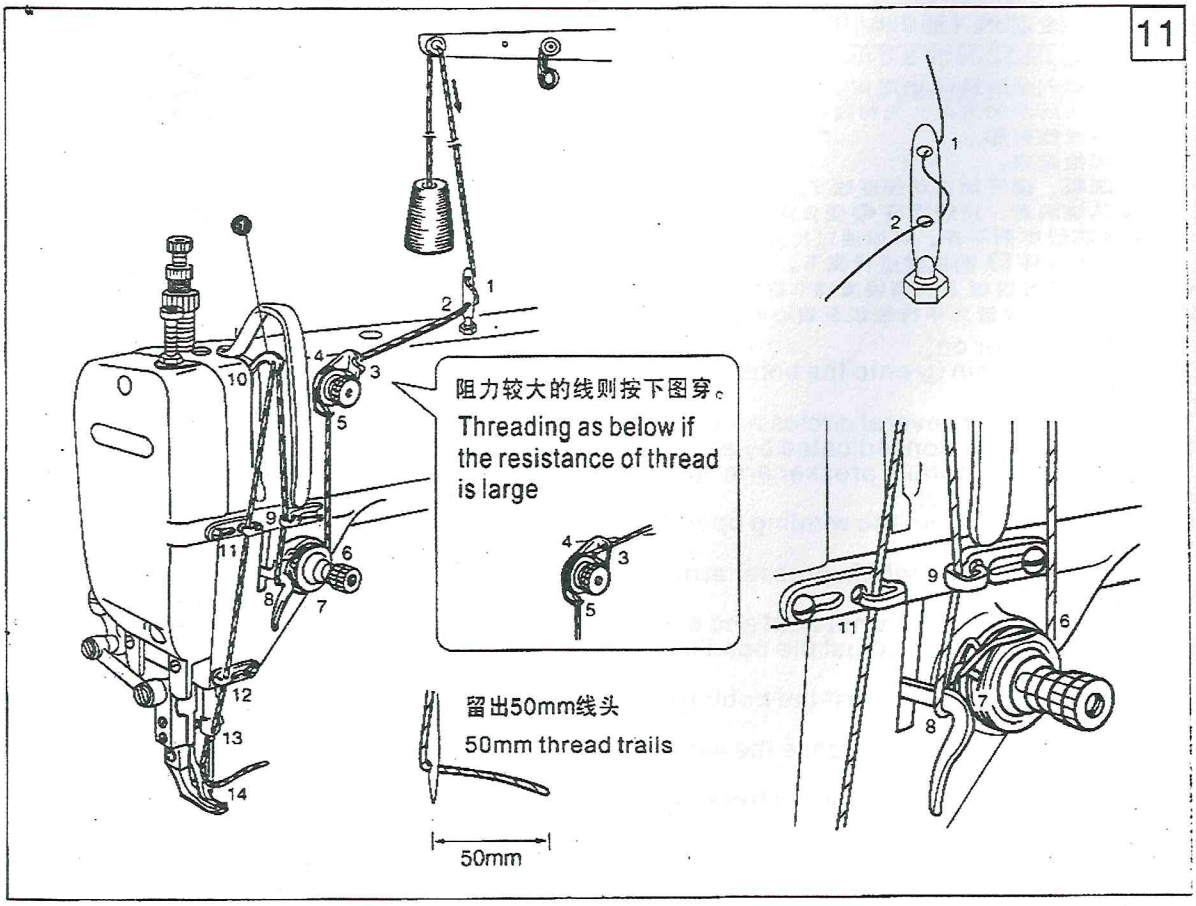

14.调节针距 (图12) Adjusting the stitch length (Fig.12)

揿下针距按键 ❷，左右转动针距盘，将针距标盘上的数字对准针距按键 ❷上的竖线标记。

* 数字越大，相应的针距越大。
* 当针距标盘上的数字从大向小方向转动时，将倒缝扳手向下压至一半位置时，转动时更加轻松一些。

While press the stopper ②, turn the stitch length dial ① to make the number on the dial align with the mark on the stopper ②. The number is the stitch length in mm.

*The larger the number, the longer the stitch length will be.
*When turn the dial from a larger setting to a smaller setting, it will be easy to turn if the reverse lever ③ is pressed down.

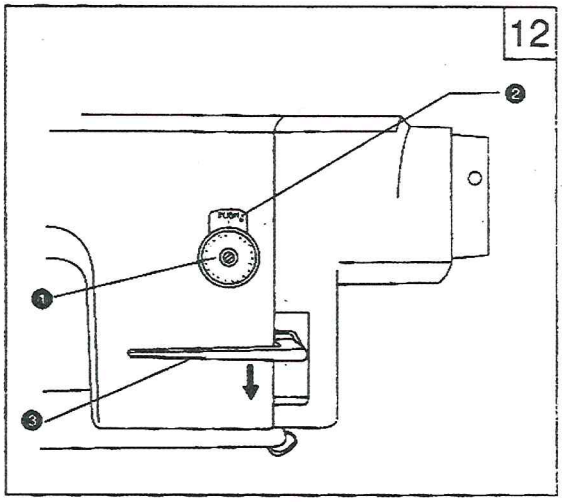

15.缝纫及倒缝 (图13) Sewing and backtacking (Fig.13)

1.揿下电源开关。

1.Turn the power on;

2.踩下踏板，缝制开始。

2.Depress the treadle to start sewing.

正常缝制过程中，按下倒缝扳手 ❶ 或是揿下自动倒缝开关，便开始反向送料，放松时，则恢复正常送料。

When the reverse lever ① is pressed or the backtacking button is on during sewing, the feed will be reversed. After release, the feed will recover to normal.

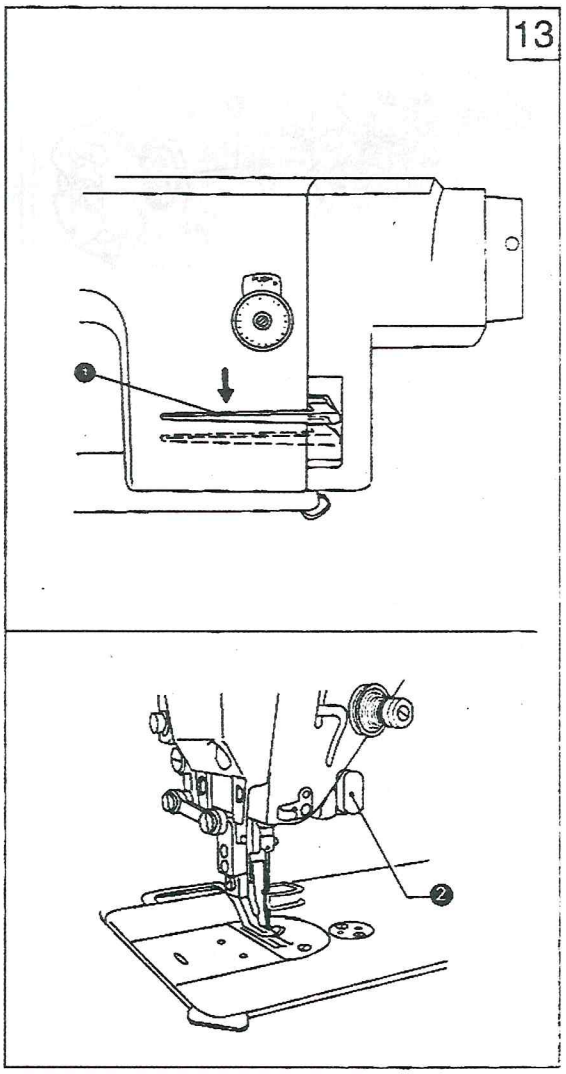

16.调节线的张力(图14) Adjusting the thread tension (Fig.14)

14

正常线迹 Normal stitch

面 线 ← Needle thread
底 线 ← Bobbin thread

● 当面线张力太弱时出现的线迹
● Stitch seam when needle thread tension is too weak

→ ● 增大面线张力 ●increase the needle thread tension
● 减弱底线张力 ●decrease the bobbin thread tension

● 当面线张力太强时出现的线迹
●Stitch seam when needle thread tension is too strong

→ ● 减弱面线张力 ●decrease the needle thread tension
● 增大底线张力 ●increase the bobbin thread tension

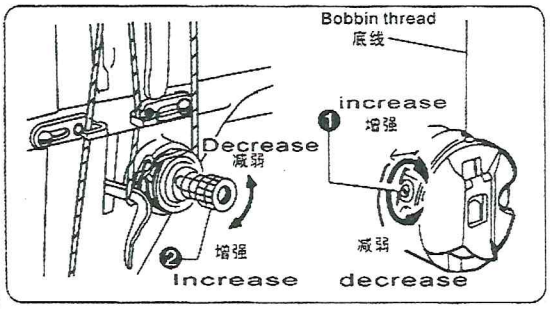

<底线张力> 通过转动梭皮螺钉❶调节底线的张力，一般为捏住线头吊起梭心套，梭芯套能够缓慢地自由落下就可使用了。

<面张力>将底线张力调节完后，再调节面线张力更好，会出现正常的线迹。

1.放下压脚。2.调节夹线器螺母❷。

<Bobbin thread tension>

·Adjust by turning the screw ① until the bobbin case drops gently by its own weight while the thread end coming out of the bobbin case is held.

<Needle thread tension>

After adjust the bobbin thread tension, adjust the needle thread tension so that a good, even stitch seam is obtained.

1.Lower the presser foot;

2.Adjust by turning the thread tension nut ②.

15

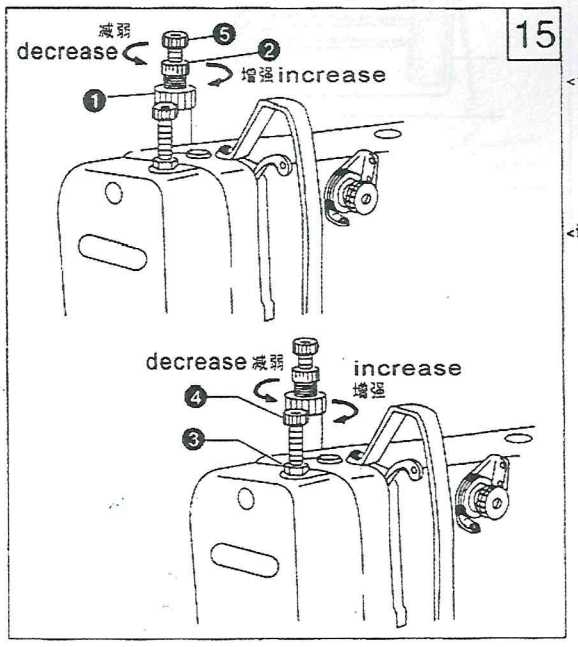

17.调节压脚压力(图15) Adjusting the presser foot pressure(Fig.15)

<调节压脚的压力> 1.旋松调压螺钉锁紧螺母❶。

2.转动调压螺钉 ❷ 来调节压脚压力，在压力不够的情况下，可以转动螺钉❺来增加压力。

*在保证缝料不打滑的情况下，压脚的压力尽可能的弱一些。

3.拧紧调压螺钉锁紧螺母❶。

<调节送料压脚的压力> 1.旋松锁紧螺母❸。

2.转动调节螺钉❹来调节送料压脚的压力，顺时针转动调节螺钉❹来增大压力，逆时针转动则减小压力。

3.拧紧锁紧螺母❸。

<Adjusting the presser foot pressure>

1.Loosen the lock nut ①;

2.Turn the adjusting screw ② to adjust the pressure of presser foot, if it's not enough, please turn the screw ⑤ to increase the pressure.

*The pressure should be as week as possible, but strong enough so that the material doesn't slip.

3. Tighten the nut ①.

<Adjusting the walking foot presser>

1.Loosen the nut ③;

2.Turn the screw ④ clockwise to increase the pressure, on the contrary, turn the screw counterclockwise to decrease the pressure;

3. Tighten the nut ③.

18.调节剪线后线头的长度 (图16)

18. Adjusting the trailing length after thread trimming(Fig.16)

通过转动小夹线螺母❶来调节。

- 在剪线的时候，夹线器松开，面线只有小夹线器提供的张力。
- 标准面线线头的长度为40~70mm。
- 如果小夹线螺母❶旋紧，那么面线的线头长度就短。
  如果小夹线螺母❶旋松，那么面线的线头长度就长。

Turn the nut ① to adjust the trailing length

- At the time of thread trimming, the thread tension mechanism will release and the needle thread tension is only applied by the thread guide ①;
- The standard trailing length for the needle thread is 40-70mm;
- If increase the thread guide tension, the trailing length will be short; if decrease the thread guide tension, the trailing length will be longer.

16

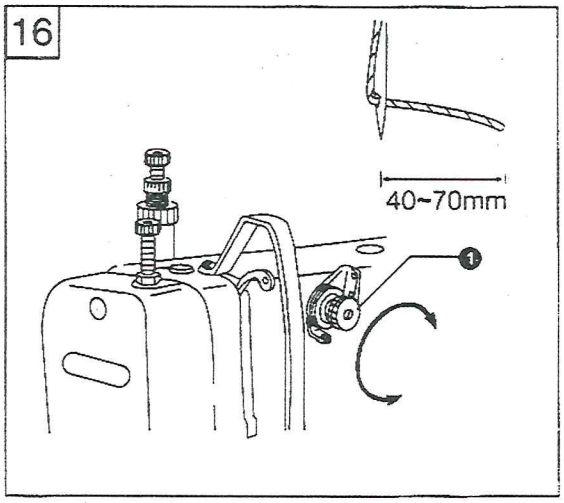

19.调节挑线簧 (图17)

19. Adjusting the thread tension spring (Fig. 17)

★ 挑线簧的标准位置为：当压脚❷放下时，大线勾❸的上表面至挑线簧❶5~8mm

1.放下压脚❷。

2.松开固定螺钉❹。

3.转动夹线组件❺调整夹线簧的位置。

4.拧紧固定螺钉❹。

★挑线簧的标准强度为0.3~0.6N。

5.将面线拉出夹线器❺少许，并用手指按住。

6.将面线向下拉，使挑线簧❶与大线勾❸上表面一致，这时就测定挑线簧的强度。

7.用开刀插入夹线螺钉槽❻中，通过转动开刀来调节挑线簧❶的力度。

注意：

当使用测力器❼请读取对准红线上的那个数字。

★The standard position of the thread tension spring ① is 5-8mm above the upper surface of the thread guide ③ when the presser foot ② is lowered.

1.Lower the presser foot ②;

2.Loosen the screw ④;

3.Turn the thread tension bracket ⑤ to adjust the spring position;

4.Tighten the screw ④.

★The standard tension of the spring is 0.3-0.6N.

5.Push the needle thread with your finger until it is slightly higher than the thread tension bracket ⑤ and so that the upper thread is not pulled out;

6.Pull the needle thread down until the spring ① is at the same height with the upper surface of thread guide ③, and then measure the tension of the spring.

7.Insert a screwdriver into the slot of the thread tension stud ⑥, and turn the stud to adjust the tension of the spring ①.

Note:

If using a tension gauge ⑦ to measure the tension, take the reading from the scale on the side of the red line.

17

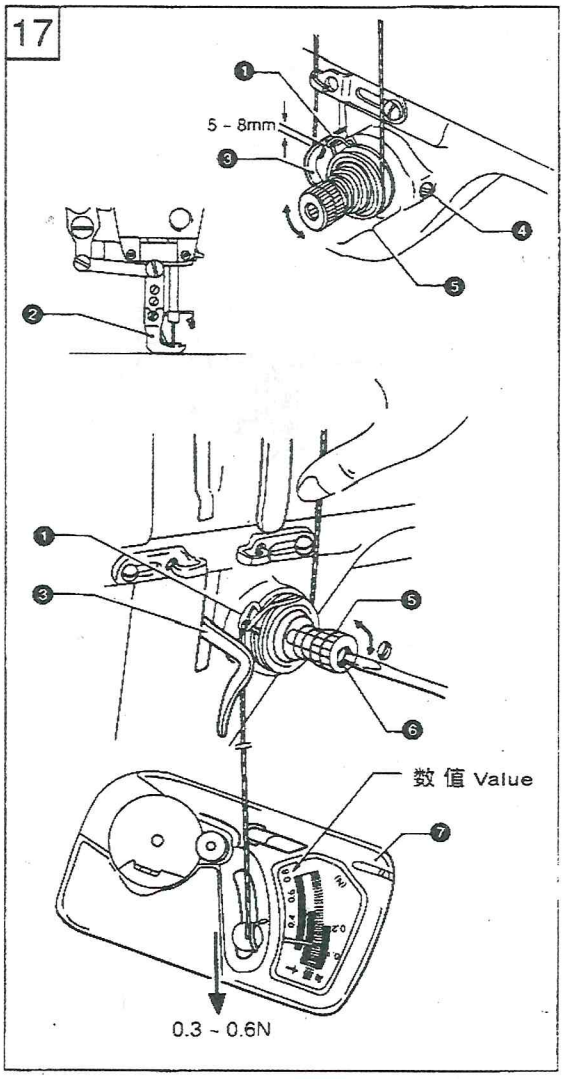

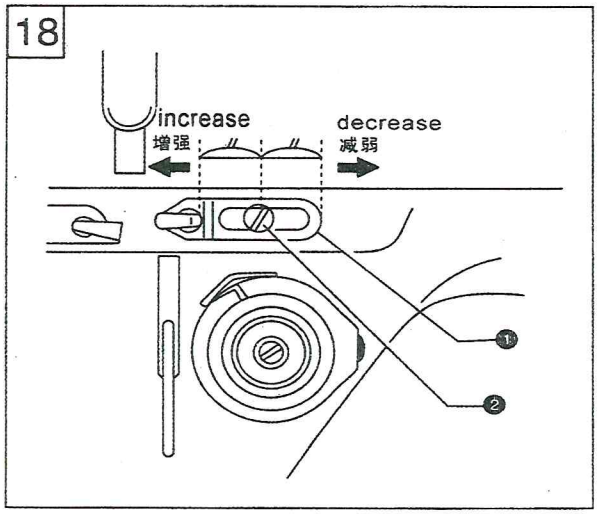

20.调节机壳线勾(图18)

20. Adjusting the upper thread guide(Fig. 18)

机壳线勾❶的标准位置是螺钉❷处于机壳线勾调节范围的中心位置。

通过松开螺钉❷，移动机壳线勾来调节位置。

当缝纫厚料时，将机壳线勾向左移（挑线力将增大）。

当缝纫薄料时，将机壳线勾向右移（挑线力将减弱）。

The standard position of upper thread guide ① is where the screw ② is in the center of the adjustable range of upper thread guide.
To adjust the position, loosen the screw ② and move the thread guide.
If stitch the heavy materials, move the thread guide leftward. (To increase the thread take-up tension)
If stitch the light materials, move the thread guide rightward. (To decrease the thread take-up tension)

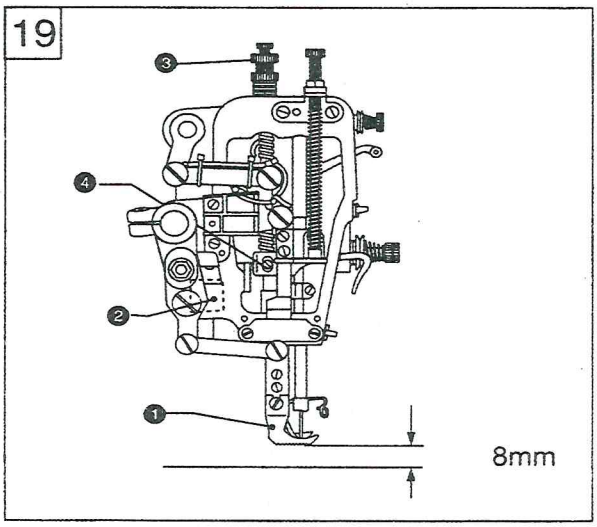

21.调节压脚高度(图19)

21. Adjusting the presser foot height (Fig. 19)

当使用压脚扳手提升压脚时,压脚①的标准提升高度为8mm

1.松开压脚调节螺钉❸，使压紧杆及压脚上升。

2.在压脚下放置8mm厚的量块。

3.松开螺钉❹上下调整压脚高度。

4.拧紧螺钉❹。

The standard height of presser foot is 8mm when it is lifted by hand.
1.Loosen the screw ③ to lift the presser bar
2.Put a measurement gauge with 8mm height under the presser foot;
3.Loosen the screw ④ and adjust the height of presser foot;
4.Tighten the screw ④.

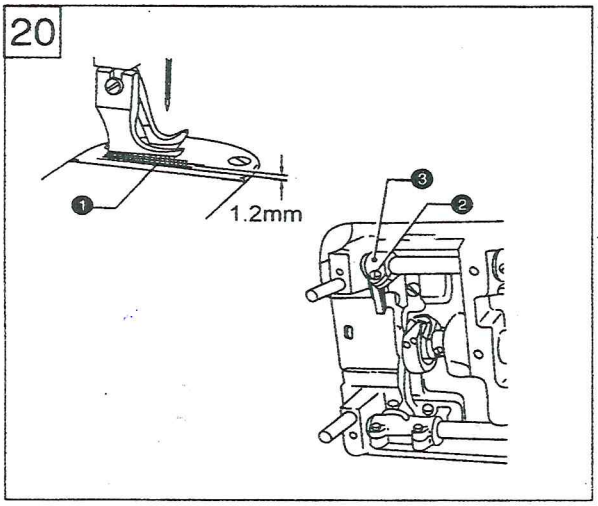

22.调节送布牙高度(图20)

22. Adjusting the feed dog height (Fig. 20)

1.最大针距时，送布牙高出针板1.2mm为标准。

2.松开螺钉❷转动抬牙叉❸的角度，就可调整送布牙齿的高度。

1.Set the stitch length maximum, when the feed dog ① is at its highest position above the needle plate, the standard height is 1.2mm
2.Loosen the screw ② and turn the feed lifting arm ③ to adjust the height of feed dog.

23.调节送布牙的角度（图21）

23. Adjusting the feed dog angle (Fig. 21)

送布牙的标准倾斜角度为：当送布牙高于针板并处于最高位置时，牙架曲柄偏心轴❺上的凹点标记处于水平位置。

1.转动上轮使送布牙浮出针板并处于最高位置。

2.松开牙架曲柄轴螺钉❼。

3.根据送布牙的标准角度位置，使凹点标记90°范围内转动调整。

*送布牙前方降低，可以防止布料起皱（图A）。

*送布牙前方抬高，可以防止布料跑偏（图B）。

4.拧紧牙架曲柄轴螺钉❼。

送布牙角度调整结束后，重新调节送布牙的高度是必要的。

The standard angle of the feed dog is: when the feed dog is at its highest position above the needle plate, the Mark on the feed bracket shaft is on the horizontal position.

1.Turn the machine pulley to lift the feed dog to its highest position;

2.Loosen the screw ⑦;

3.Turn the feed bracket shaft in the direction of the arrow within a range of 90 with respect to the standard angle position.

*In order to prevent puckering, lower the front of the feed dog (Fig. A)

*In order to keep the materials straight, raise the front of the feed dog (Fig. B)

4.Securely tighten the set screw ⑦.

It's necessary to adjust the feed dog height a gain after this adjustment.

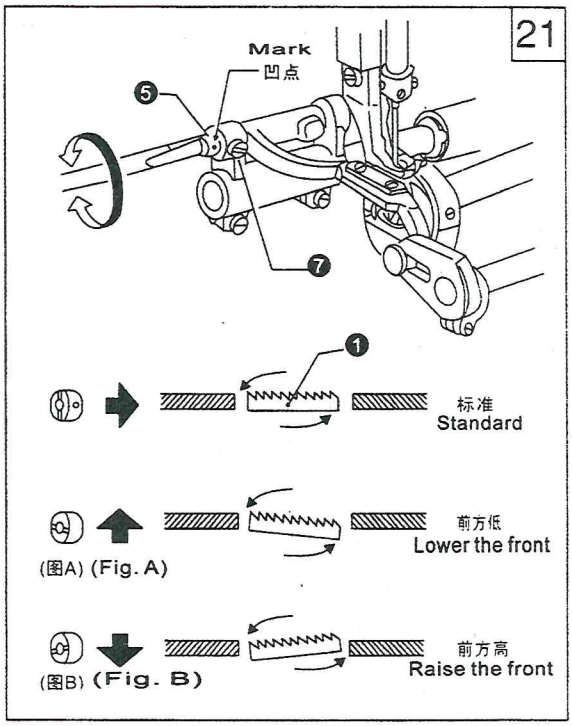

24.调节倒顺缝针距误差（图22）

24. Adjusting the difference of stitch length between the forward and backtacking (Fig.22)

1.卸下后盖板。

2.松开螺钉❶转运针距调节连杆偏心销钉❷。

*顺时针转：顺缝针距变大，倒缝针距变小。

*逆时针转：顺缝针距变小，倒缝针距变大。

3.拧紧螺钉❶。

1.Remove the rear cover;

2.Loosen the screw ① and turn the connecting stud ②

*Turn the stud ② clockwise, the forward stitch length will be longer and the backtacking stitch length will be shorter;

*Turn the stud ② counterclockwise, the forward stitch length will be shorter and the backtacking stitch length will be longer;

3.Tighten the screw ①.

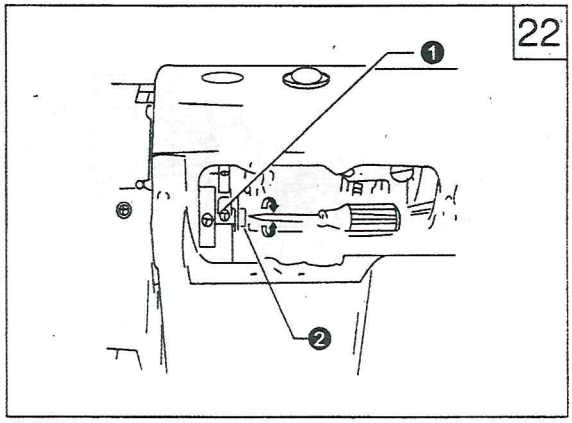

25.调节松线器的挺线（图23）

25. Adjusting the tension release (Fig. 23)

压脚在提升范围内，夹线器上的夹线板有一个张开期，挺线的时间可进行调节。调节时，先卸下机头后侧面的橡皮塞，用螺丝刀旋松膝控提升杠杆（左）螺钉❶，这时松线凸轮可以左右移动，往右移挺线慢，往左移挺线快。

The opening time of the thread tension discs can be adjusted.

Remove the rubber cap on the rear of arm, and turn the screw ①, then the thread release cam ② can be moved left or right.

Move the cam rightward, the release time will be slow

Move the cam leftward, the release time will be quick.

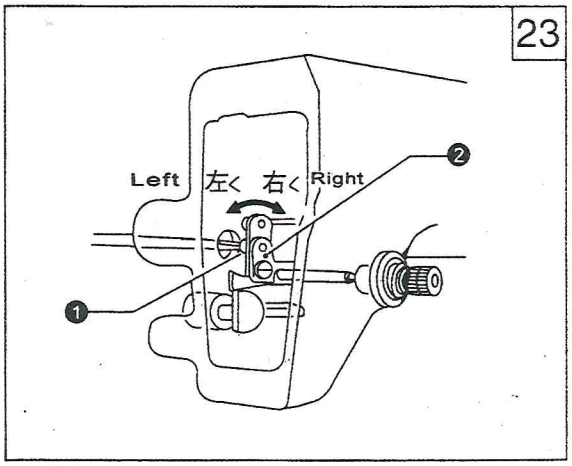

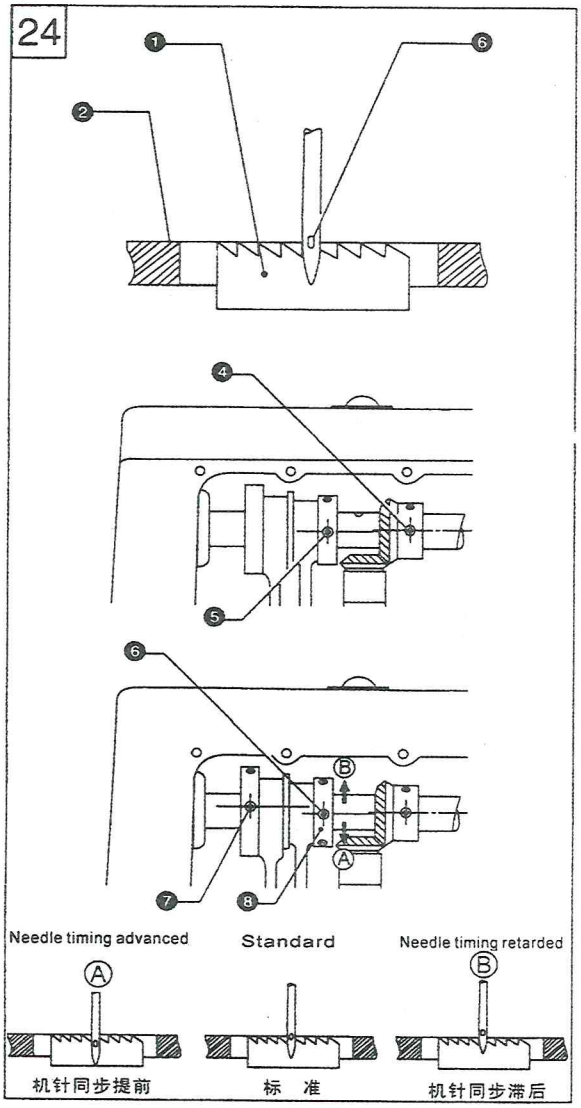

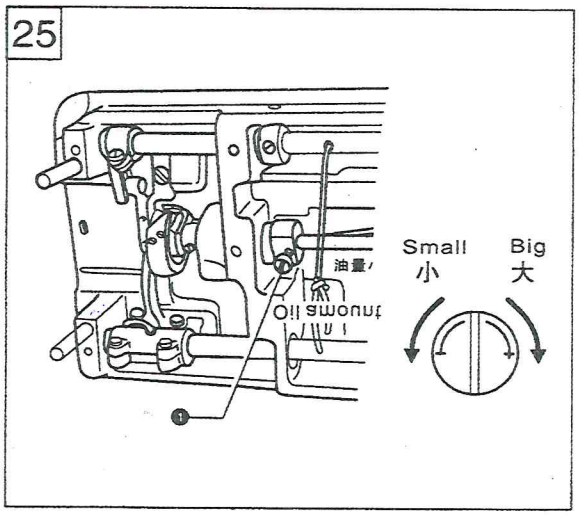

26.调节机针与送布机构同步(图24)

26.Adjusting the timing of needle and feed mechanism (Fig. 24)

标准位置：

当送布牙从最高位置下降，机针孔中心❸应与针板上表面❷、送布牙顶端❶在同一水平面上。

调整可以通过调节送布凸轮和抬牙凸轮的安装位置进行。

1.卸下后盖板。

2.用左手逆时针转运上轮，以上轴齿轮第二只固定螺钉❹为基准，抬牙凸轮的第三只固定螺钉❺中心，将对齐❹中心，稍微向下偏一点。

3.继续逆时针转动上轮，以抬牙凸轮❽第二只紧固螺钉❻为基准，送布凸轮的第三只紧固螺钉❼中心，将对齐❻中心，稍微向上偏一点。

4.若要调整为非标准位置，则先松开抬牙凸轮上三颗螺钉,再根据Ⓐ或Ⓑ所示方向少许转动偏心凸轮❽。

为增加线的张力，则向Ⓐ方向转动。

为避免机针折弯，则向Ⓑ方向转动。

5.调整结束后，拧紧所有螺钉。

The standard timing is when the feed dog is lowered from its highest position until it is flush with the top of the needle plate ②, and the needle eye ③ is also aligned horizontally with the surface.

Adjust by changing the phases of feed cam and eccentric wheel UD

1.Remove the rear cover

2.Turn the machine pulley in reverse direction, set the second screw ④ on the gear of upper shaft as reference mark, make the third screw ⑤ of eccentric wheel UD slightly lower than the reference mark screw ④;

3.Continue to turn the machine pulley, set the second screw ⑥ of eccentric wheel UD as reference mark, make the third screw ⑦ of feed cam slightly higher than the reference mark screw ⑥.

4.If need a non-timing position, loosen the three screws of eccentric wheel UD, adjust the eccentric cam ⑧ in the direction of arrow (A) or (B)

To increase the tension of thread, turn the eccentric cam ⑧ to direction (A)

To avoid the needle bent, turn the eccentric cam ⑧ to direction (B)

5.After adjustment, tighten all of the screws.

27.调节旋梭油量(图25)

27. Adjusting the rotary hook lubrication amount (Fig. 25)

放倒机头，转动油量调节螺钉❶来调节油量大小。

Tilt back the machine head, and turn the oil adjustment screw ① to adjust the hook oiling amount.

28.调整针杆高度与旋梭同步（图26）

28. Adjusting the height of needle bar and the timing with hook (Fig. 26)

当针杆降至最下位置时，针杆❶最上面的刻线标记应与针杆下套❷的下端面一致。

1.转动上轮，使针杆降至最下位置。

2.取下橡皮塞❸。

3.松开螺钉❹，然后上下移动针杆❶来调节它的位置。

4.拧紧螺钉❹。

5.塞上橡皮塞❸。

使针杆❶从最下位置上升，当针杆❶上数第二条刻线标记Ⓑ对准针杆下套❷的下端面时（如图所示），旋梭的梭尖❺应对准机针❻的中心。

1.转动上轮使针杆❶从最低位置上升，直至上数第二条刻线标记Ⓑ对准针杆下套的边沿。

*当针杆上升2mm时，针眼上限与旋梭梭尖之间的距离为1.3~1.8mm。

2.松开螺钉❼，然后将梭尖对准机针❻的中心。此时旋梭尖与机针的侧面间隙为0.05mm。

3.拧紧螺钉❼。

When the needle bar ① is at its lowest position, the top reference line (A) on the needle bar should be aligned with the bottom edge of the needle bar bush ②.

1.Turn the machine pulley to lower the needle bar to its lowest position;

2.Take out the rubber cap ③;

3.Loosen the screw ④, and move the needle bar ① to proper position;

4.Tighten the screw ④;

5.Close the rubber cap ③.

Lift the needle bar ① from the lowest position, when the second reference line (B) on the needle bar is aligned with the bottom edge of the needle bar bush ②, the tip ⑤ of the hook should be aimed at the center of needle ⑥.

1.Turn the machine pulley to raise the needle bar ① from its lowest position until the reference line (B) is aligned with the bottom edge of the needle bar bush ②

*When the needle bar moves up 2mm, the clearance between the upper of needle hole and the hook tip should be 1.3-1.8mm

2.Loosen the screw ⑦, and make the hook tip aimed at the center of needle ⑥, the clearance between the hook tip and needle should be 0.05mm

3.Tighten the screw ⑦.

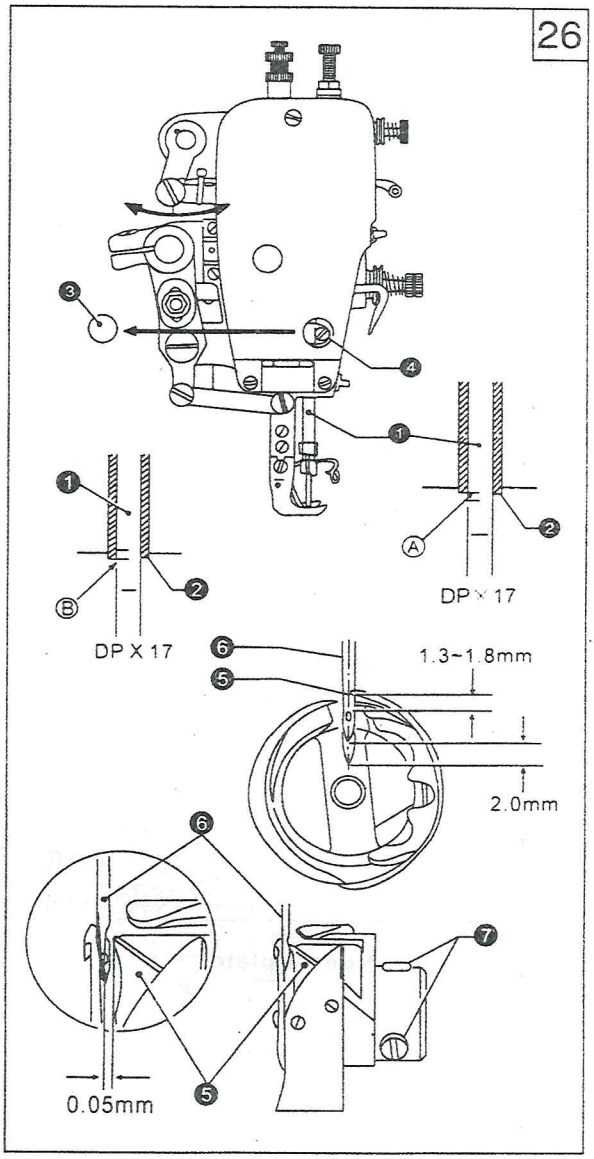

29.调节油泵供油（图27）

29. Adjusting the oil pump (Fig. 27)

当低速运转时，观察油窗，无喷油现象时，请转动供油调节板❶，将其盖住油孔❷。

If the oil is not circled observed from the oil gauge window at a lower sewing speed, turn the oil adjustment plate ① to cover the oil hole②.

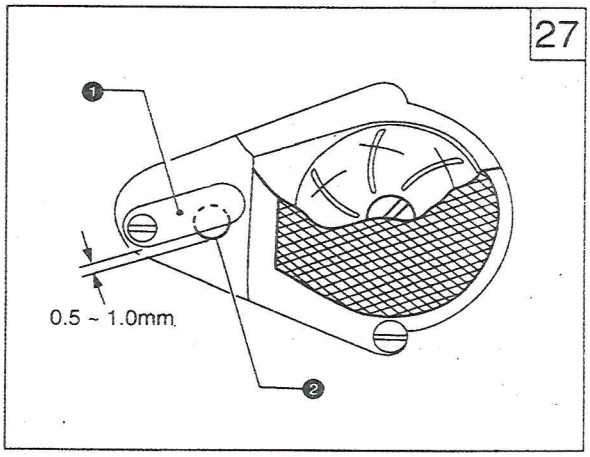

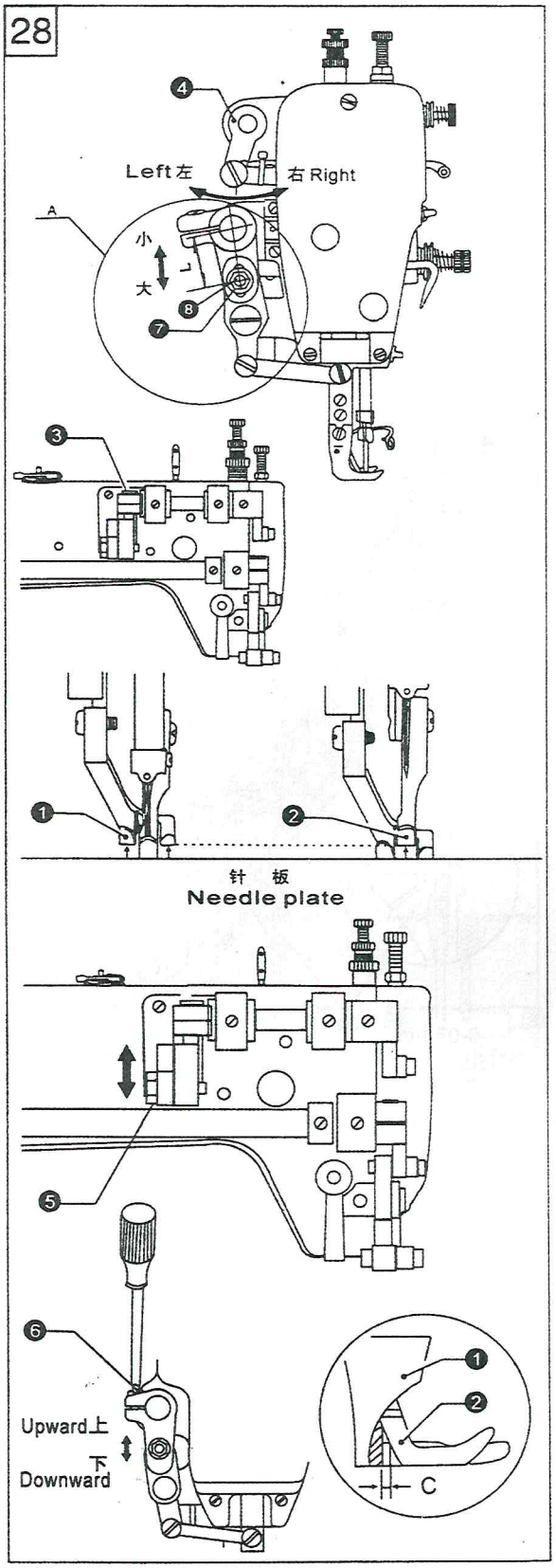

30.调节摆压脚与小压脚交替提升量(图28)

30. Adjusting the lifting amount of presser feet (Fig. 28)

1.摆压脚及小压脚的垂直方向运动：

★ 摆压脚及小压脚是交替式的上下运动。

★ 摆压脚及小压脚上升高度一般是相同的或是小压脚的上升高度略低一些。

将挑线杆置于最下位置，放下压脚扳手，松开螺钉❸使压脚升降前曲柄左，右移动来调节交替提升量。

（右移：两压脚交替提升量趋于相同
左移：小压脚的提升量减小）

1.Vertical movement of presser foot and walking foot

★The walking foot ① and presser foot ② move vertically one after another

★Usually the stroke of walking foot and presser foot is same or the stroke of presser foot is slightly lower.

Place the thread take-up lever at the lowest position, and lower the presser bar lifter, loosen the screw ③ and move the upper feed lifting cam ④.

Move it rightward to make the stroke of two feet be equal

Move it leftward to make the stroke of presser foot be smaller.

2.摆压脚及小压脚总提升量的调节：

根据缝料的不同要改变摆压脚，小压脚的提升量。先将偏心轮连杆螺钉❺旋松，然后上、下移动来调节该螺钉与压脚升降轴的中心距，中心距调小，则各自的提升量都增加。

2.Adjusting the lifting amount of presser feet

Adjust the lifting amount of two feet to match the materials to be sewn.

Loosen the screw ⑤, and move the screw upward to increase the lifting amount or move the screw downward to decrease the lifting amount.

3.摆压脚、小压脚前后方向间隙的调节：

★为了在缝纫过程中，使摆压脚槽的前端与小压脚后端面不碰撞，必须保持适当的间隙C（3mm左右）。

旋松摆压脚前曲柄螺钉，然后上、下转动压脚摆动轴❻来进行调节。

3.Adjusting the forward/backward clearance of the two feet

To keep the front groove of walking foot not strike the rear of the presser foot, the clearance of C must be kept about 3mm.

Loosen the screw of feed arm R, and then turn the feed rock shaft ⑥ to adjust.

4.摆压脚量的调节（见A部）

★送布牙送料量与摆压脚送料量之间的标准比率为1:1（同步送料）。

摆压脚的送料量可根据缝料不同进行调整，松开螺母❼，上下移动摆压脚滑块❽来调节。

（向上：减小中心距L，摆压脚送料量减小
向下：增大中心距L，摆压脚送料量增大）

4.Adjusting the feed amount of walking foot (Fig. A)

★The standard ration of feed amount between feed dog and walking foot is 1:1

The feed amount of walking foot can be adjusted to suit for the materials to be sewn.

Loosen the nut ⑦, and move the slide block ⑧

Upward: decrease the distance L to make the feed amount be smaller

Downward: increase the distance L to make the feed amount be larger

31.剪线装置的调整 Adjusting the trimming mechanism

1，剪线装置（结构见图29）1.Trimming mechanism (Fig. 29)

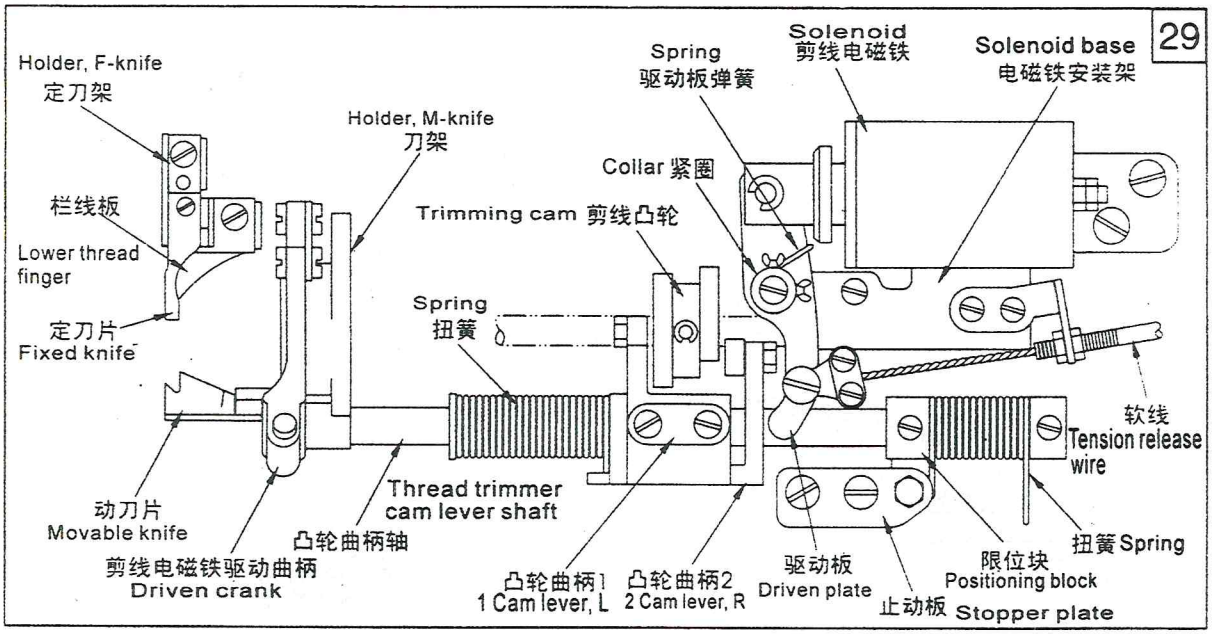

2、定刀片与动刀片的关系：（见图30）

(1)定刀片①与动刀片②的位置应保证0.3mm。

(2)可以如图所示进行调整定刀座或定刀片的正确位置。

(3)移开旋梭定位勾，安装定刀座。

2. The relation between fixed knife and movable knife (Fig.30)
(1)The clearance between fixed knife ① and movable knife ② should be 0.3mm
(2)Adjust the position illustrated by the Fig. 35
(3)Move the bobbin case opener and adjust the holder of fixed knife.

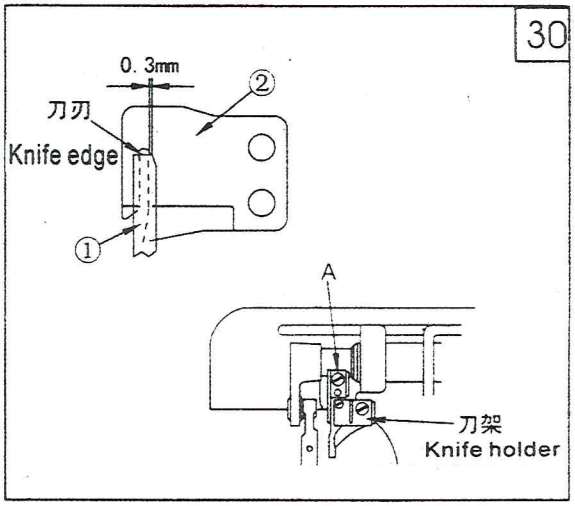

3、凸轮曲柄轴（见图31）

(1)装配时，将凸轮曲柄轴1最先装在底板上。

(2)凸轮曲柄1必须如图所示安装，固定在凸轮曲柄轴1上的平面处。

(3)轻轻转动凸轮曲柄轴1，将限位块2安装在凸轮曲柄轴1上的平面处。

3. Thread trimmer cam lever shaft (Fig. 31)
(1)Install the shaft ① on the machine bed first;
(2)Install the cam lever L on the shaft ① as illustrated;
(3)Slightly turn the shaft ①, and install the positioning block ② as illustrated.

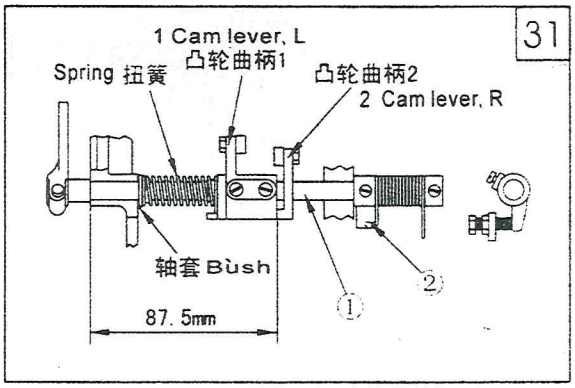

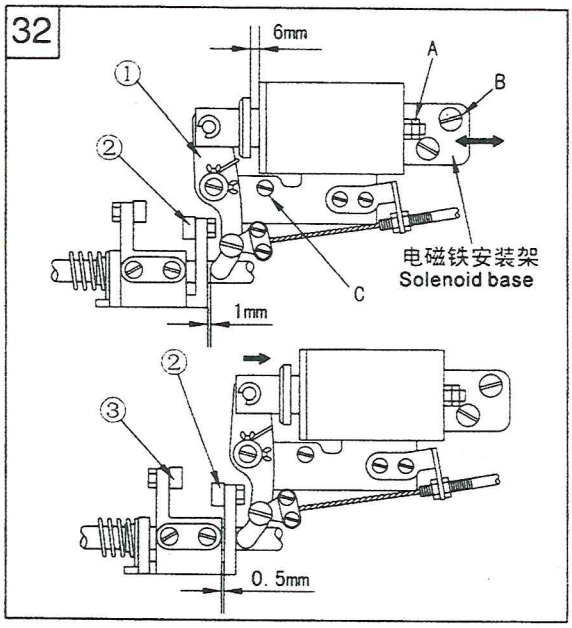

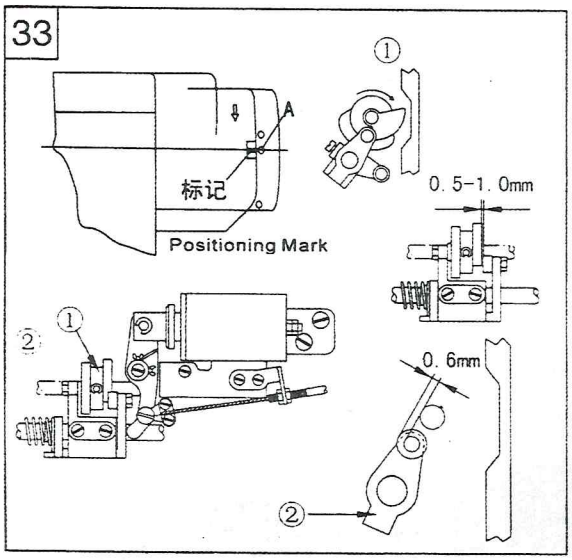

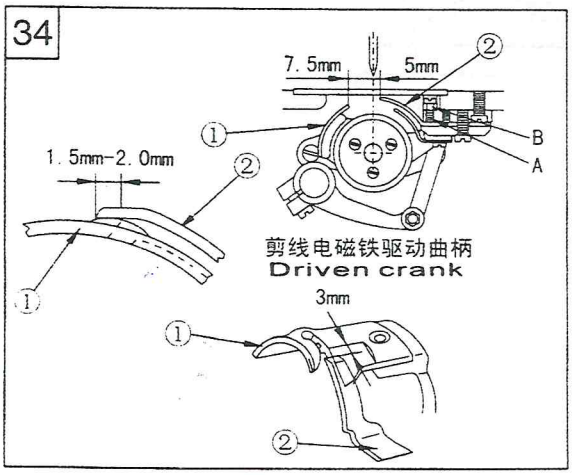

4、安装剪线电磁铁（见图32）

(1)剪线电磁铁的行程：

a.标准的行程为6.0mm。

b.通过调节螺母A来调整行程。

(2)安装剪线电磁铁：

a.剪线电磁铁用螺钉B和C来固定。

B.在安装时必须保证驱动板1与凸轮曲柄2之间的间隙1mm

C.电磁铁工作时，凸轮曲柄3与凸轮曲柄2之间会有0.5mm的间隙，这是标准的情况。如需调整可以如图26所示箭头方向滑动电磁铁安装架。

4.Installing the trimming solenoid (Fig. 32)

(1)The stoke of solenoid

a. The standard stroke is 6.0mm

b. Turn the nut (A) to adjust the stroke

(2)Installing the solenoid

a.Fixed the solenoid by the screws B and C;

b. Be sure to keep the clearance between the driven plate ① and cam lever R ② 1mm;

c. When the solenoid is active, there should be a 0.5mm clearance between the cam lever L ③ and cam lever R ②. If need to adjust, please move the solenoid base shown by the arrow.

5、安装剪线凸轮（见图33）

(1)将主动轮上的第2标记点对准电机罩上的定位标记点。

(2)将剪线电磁铁开动向前旋转剪线凸轮1直到接触滚柱，然后固定凸轮。

(3)剪线电磁铁关闭，使凸轮曲柄2回复到原始位置，这样凸轮与滚柱端面将会产生0.5-1.0mm的标准间隙。

5.Installing the trimming cam (Fig. 33)

(1)Align the second mark A on the machine pulley with the Positioning Mark on the arm;

(2)Set the solenoid active and turn the trimming cam ① until the cam is touched with the roller, then fix the cam;

(3)Set the solenoid inactive and make the cam lever ② restore to the original position, there should be a 0.5-1.0mm clearance between cam and roller.

6、刀片的调整（见图34）

(1)动刀片与定刀片的关系：

如图所示，动刀片1与机针中心的距离为7.5mm，定刀片2与机针中心的距离为5mm

(2)刀片的调整：

开动电磁铁，启动机器。这样，剪线凸轮会使动刀片1右旋转。当动刀片1左移动到其最远位置时，与定刀片2的间隙为1.5-2.0mm。

(3)剪线电磁铁的调整：

A.如果剪线情况不良，尤其当线较粗时，只需增加剪线压力即可。

B.剪线压力可如下所述进行调整：松开螺母B，通过调节螺钉A来调节螺母B。

6.Adjusting the knives (Fig. 34)

(1)The relation between fixed knife and movable knife

The clearance between movable knife ① and needle center is 7.5mm, and the clearance between fixed knife ② and needle center is 5mm.

(2)Set the solenoid active, the movable knife ① will turn rightward driven by the trimming cam. When the movable knife ① moves to its left furthest position, the clearance between two knives ① and ② should be 1.5-2.0mm

(3)Adjusting the trimming solenoid

A.If the thread trimming not smoothly, especially the thick thread used, just need to increase the trimming pressure;

B.Adjusting the trimming pressure: loosen the nut B, adjust the screw A to get the reasonable pressure.

32.清扫(图35) 38.Clean (Fig. 35)

1.抬起压脚。

2.拧开两螺钉 ❶，然后卸下针板 ❷。

3.使用软毛刷对送布牙进行清扫。

4.装上针板 ❷及拧紧两螺钉 ❶。

1.Raise the presser foot;
2.Remove the two screws ① and needle plate ②;
3.Clean the feed dog with a soft brush;
4.Install the needle plate ② by two screws ①.

5.缓慢转动上轮，观察机针是否落入针板孔的中心位置。

* 如果机针不时落入中心位置。

· 检查机针是否弯曲。

· 松开两螺钉 ❶，然后重新安装针板 ❷。

5.Turn the machine pulley slowly and check if the needle drops into the hole center of needle plate
★If not
●Check if the needle is bent
●Loosen the screw ①, and reinstall the needle plate ②

6.转动上轮将机针上升至针板以上，然后观察机针针尖是否钝挫，如果钝挫则更换机针。

7.放倒机头。

8.卸下梭芯套 ❹。

9.用软布将旋梭中的灰尘擦除干净，并检查旋梭是否被损坏。

10.将梭芯从梭芯套中拿出，用布将梭芯套擦干净。

11.将梭芯放入梭芯套中，然后将梭芯套装入旋梭中。

12.清除油泵滤网（A）上的尘屑。

6.Turn the machine pulley and lift the needle above the needle plate, check if the needle tip is blunt, if yes, change a new one.
7.Tilt back the machine head
8.Remove the bobbin case ④
9.Clean the hook with a soft cloth and check if the hook is worn out
10.Take out the bobbin from the bobbin case, and clean the bobbin case with a soft cloth
11.Insert the bobbin into the bobbin case and place the bobbin case back into the machine
12.Clean the dust on the filter (A) of oil pump.

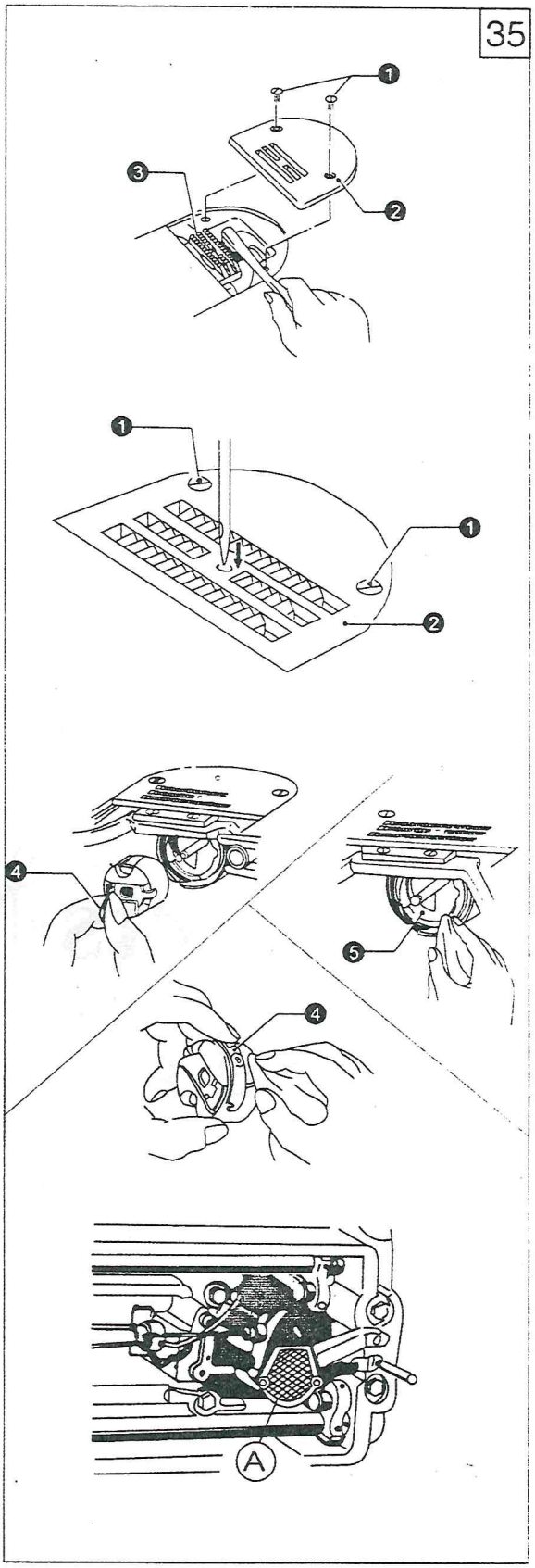

零 件 手 册

Parts Manual

1、机壳部件 Casting mechanism

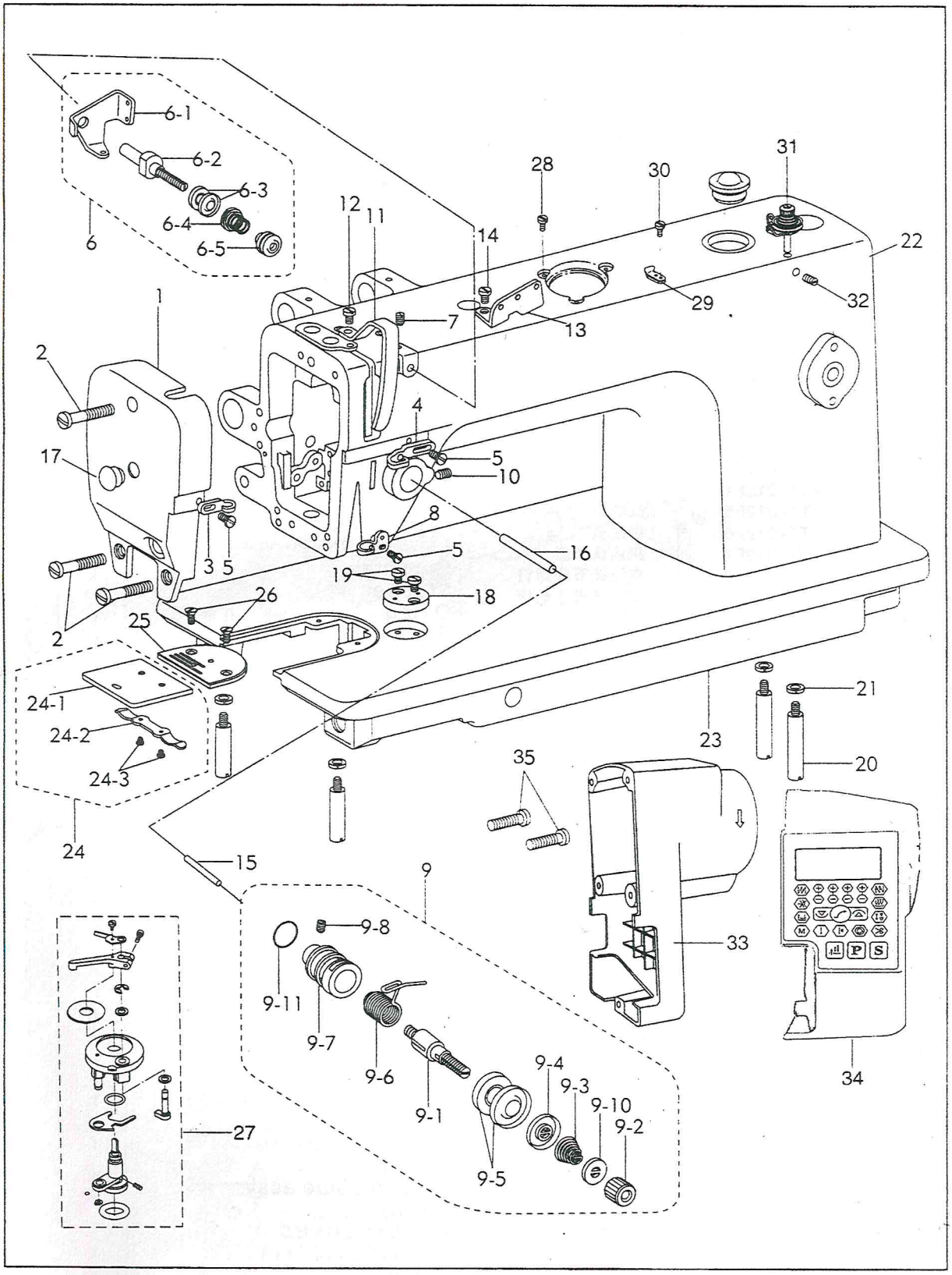

1、机壳部件 Casting mechanism

序号 No.	图号 Part Number	零件名称 Name		数量 Qt. 0303D	6202D
1	1KT1-002	面板	Face plate	1	-
		面板	Face plate	-	1
2	7WF4-004	面板螺钉	Screw	3	-
		面板螺钉	Screw	-	3
3	22T1-003C5	面板线勾	Thread guide	1	1
4	22T1-014	线勾	Thread guide	1	1
5	22T1-003C6	线勾螺钉	Screw	3	3
6	36T2-006D	小夹线组件	Thread guide assy.	1	1
6-1	36T2-006D1	小夹线过线板	Thread guide	1	1
6-2	36T2-006D2	小夹线螺钉	Pre-tension stud	1	1
6-3	22T2-009E3	小夹线组板	Tension disc	2	2
6-4	2KT2-011	小夹线弹簧	Tension spring	1	1
6-5	36T2-006D4	小夹线螺母	Adjusting screw	1	1
7	20T1-004	小夹线固定螺钉	Set screw	1	1
8	7WF4-015	下线勾	Thread guide	1	1
9	33T4-008C	夹线组件	Thread tension bracket assy.	1	1
9-1	22T1-012F1	夹线螺钉	Tension stud	1	1
9-2	22T1-012F2	夹线螺母	Tension nut	1	1
9-3	33T4-008C1	夹线弹簧	Tension spring	1	1
9-4	22T1-012F4	松线板	Disc presser	1	1
9-5	22T1-012F5	夹线板	Disc, tension	2	2
9-6	22T1-012F6	挑线簧	Thread take-up spring	1	1
9-7	22T1-012F7	夹线调节座	Thread tension bracket	1	1
9-8	22T1-012F8	夹线调节座螺钉	Set screw	1	1
9-10	22T1-012F10	夹线螺母止动板	Stopper	1	1
9-11	22T1-012F11	O型圈	O ring	1	1
10	22T1-013	夹线调节座固定螺钉	Set screw	1	1
11	1KT1-003	挑线杆防护罩	Cover	1	1
12	22T2-004	挑线杆防护罩螺钉	Screw	1	1
13	36T2-004	三孔线勾	Thread retainer	1	1
14	36T2-005	三孔线勾螺钉	Screw	1	1
15	2KT4-002	松线钉	Tension release pin	1	1
16	2KT4-003	松线棒	Tension release stud	1	1
17	7WF4-030	橡皮塞	Rubber plug	1	1
18	7WF4-005	夹具座	Ruler plate	1	1
19	1WF3-025	夹具座螺钉	Screw	2	2
20	7WF4-013	底板撑杆	Bed leg	4	4
21		底板撑杆弹簧垫片	Washer, spring	4	4
22	271WF1-001	机壳	Arm	1	-
	258WF1-001	机壳	Arm	-	1
23	241WF1-001	底板	Bed	1	1
24		推板组件	Slide plate assy.	1	1
24-1	7WF4-006	推板	Slide plate	1	1
24-2	20T1-013F2	推板簧	push the spring	1	1
24-3	20T1-013F3	推板簧螺钉	Screw	2	2
25	2KT2-003	针板	Needle plate	1	1
26	22T1-020	针板螺钉	Screw	2	2
27	199WF5-012	绕线器组件	winding device assembly	1	1
28	92WF2-027	绕线器组件固定螺钉	Screw	3	3
29	52WF2-043	切刀	sutting knife	1	1
30	36WF2-031	切刀螺钉	Screw	2	2
31	258WF1-005	绕线器小夹线器组件	Thread guide assy.	1	-
32	1WF5-019	小夹线器固定螺钉	Screw	-	1
33	258WF1-006	电机罩	motor cover	1	-
34		电控箱	electric cabinet	5	5
35		电机罩螺钉	Screw		

2.针杆、挑线部件 Needle bar and thread take-up mechanism

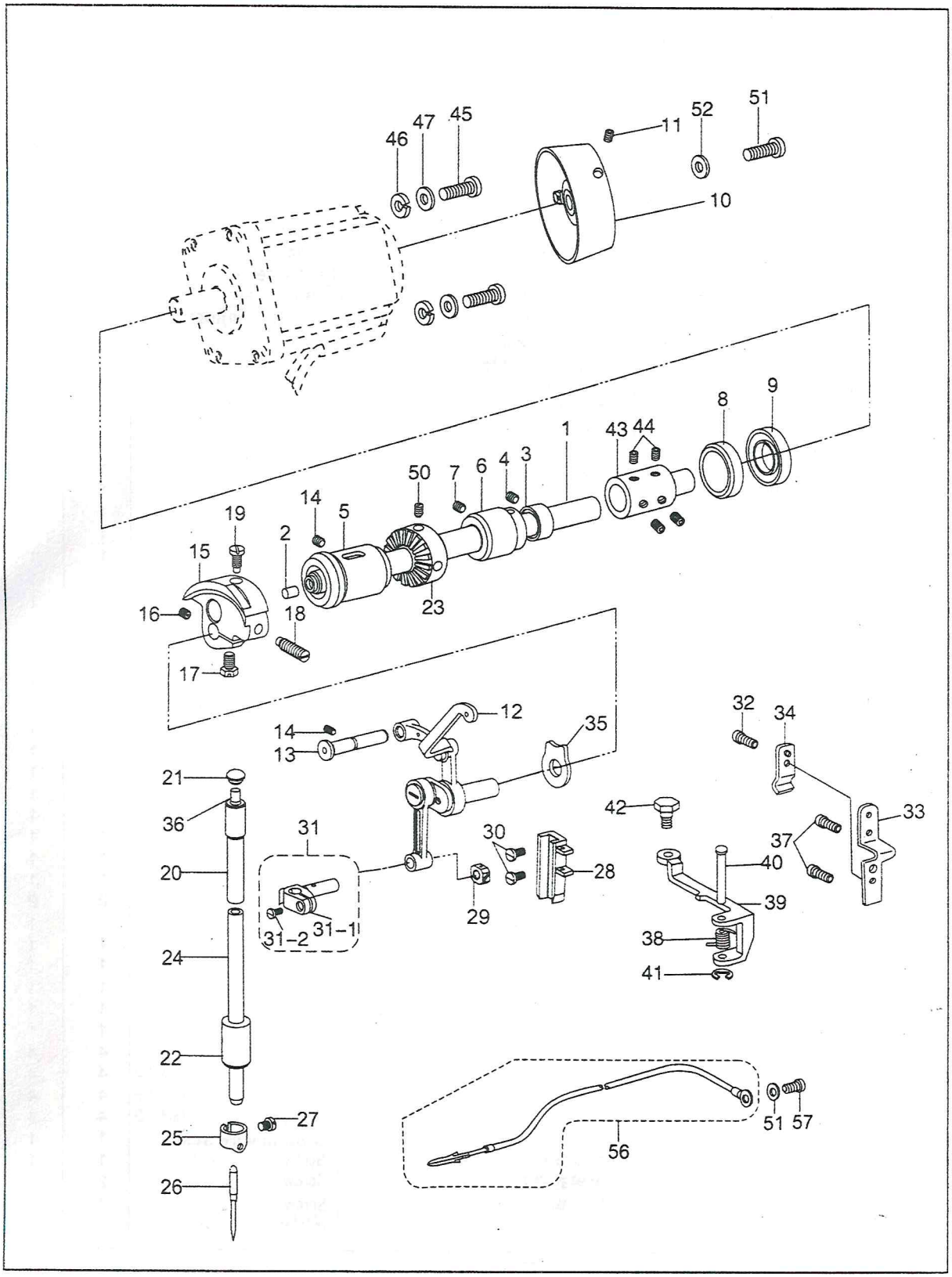

2.针杆、挑线部件 Needle bar and thread take-up mechanism

序号 No.	图号 Part Number	零件名称 Name		数量 Qt. 0303D	数量 Qt. 6202D
1	271WF2-001	上轴	Upper shaft	1	1
2	22T3-001A2	上轴橡皮塞	Robber cap	1	1
3	22T3-002B1	上轴紧圈	Collar	1	1
4	22T3-002B2	上轴紧圈螺钉	Screw	2	2
5	4WF1-006A	上轴前轴套	Bush, L	1	1
6	4WF1-002	上轴中轴套	Bush, M	1	1
7	J0.0.40	上轴中轴套螺钉	Set screw	1	1
8		上轴后轴承	Bush, R	1	1
9	258WF2-004	上轴后油封组件	Oil seal	1	1
10	258WF2-006	主动轮	Hand wheel	1	1
11	258WF2-007	主动轮螺钉	Screw	2	2
12	33T1-004B	挑线杆组件	Thread take-up lever set	1	1
13	33T1-002	挑线连杆铰链轴	Support shaft	1	1
14	J0.0.5	挑线连杆铰链轴螺钉	Set screw	2	2
15	4WF1-007A	针杆曲柄	Thread take-up crank	1	1
16	33T1-006C3	挑线曲柄螺钉	Screw	1	1
17	22T2-005B3	挑线曲柄定位螺钉	Screw	1	1
18	33T1-006C2	针杆曲柄螺钉	Screw	1	1
19	20T2-007	针杆曲柄定位螺钉	Screw	1	1
20	22T2-008	针杆上轴套	Bush, U	1	1
21	22T2-011	针杆上轴套橡皮塞(φ8.8)	Rubber cap	1	1
22	2KT1-002	针杆下轴套	Bush, D	1	1
23	258WF2-002	绕线器摩擦轮	Screw	1	1
24	2KT1-001	针杆	Needle bar	1	1
25	22T2-015	针杆过线环	Thread guide	1	1
26		机针	Needle	1	1
27	22T2-017	夹针螺钉	Set screw	1	1
28	2KT1-003	滑块槽	Guide	1	1
29	33T1-013	针杆接头滑块	Slide block	1	1
30	22T2-019	滑块导轨螺钉	Screw	2	2
31	33T1-015H	针杆接头组件	Needle bar clamp assy.	1	1
31-1	22T8-001A8	针杆接头	Needle bar clamp	1	1
31-2	22T8-001A9	针杆接头螺钉	Set screw	1	1
32	2KT4-013	软线固定板螺钉	Screw	1	1
33	2KT4-010	松线钢绳固定架	Wire holder, U	1	1
34	2KT4-012	松线压板	Wire holder, D	1	1
35	33T1-005	垫片	Washer	1	1
36	22T1-010	针杆上轴套毛毡	Felt	1	1
37	2KT4-011	松线钢绳固定架螺钉	Screw	2	2
38	2KT4-006	铰链弹簧	Spring	1	1
39	2KT4-004	松线铰链	Tension release plate	1	1
40	2KT4-005	铰链销	Tension release pin	1	1
41		开口挡圈	Retaining ring	1	1
42	2KT4-009	铰链螺钉	Screw	1	1
43	258WF2-003	联轴器	Connect block	1	1
44	19WF3-005	联轴器螺钉	Screw	4	4
45		电机安装螺钉	Screw GB/T6	4	4
46		弹簧垫片	Washer GB/T8	4	4
47		平垫片	Washer GB/T9	4	4
48	2KT8-001	地线组件	Ground wire assy.	1	1
49	2KT5-005	地线螺钉	Screw	1	1
50	6K2-043	磨擦轮螺钉	Screw	2	2
51	18WF4-023	磁钢螺钉	Screw	1	1
52	22T1-007	垫片	Washer	1	1

3. 压脚部件 Presser foot mechanism

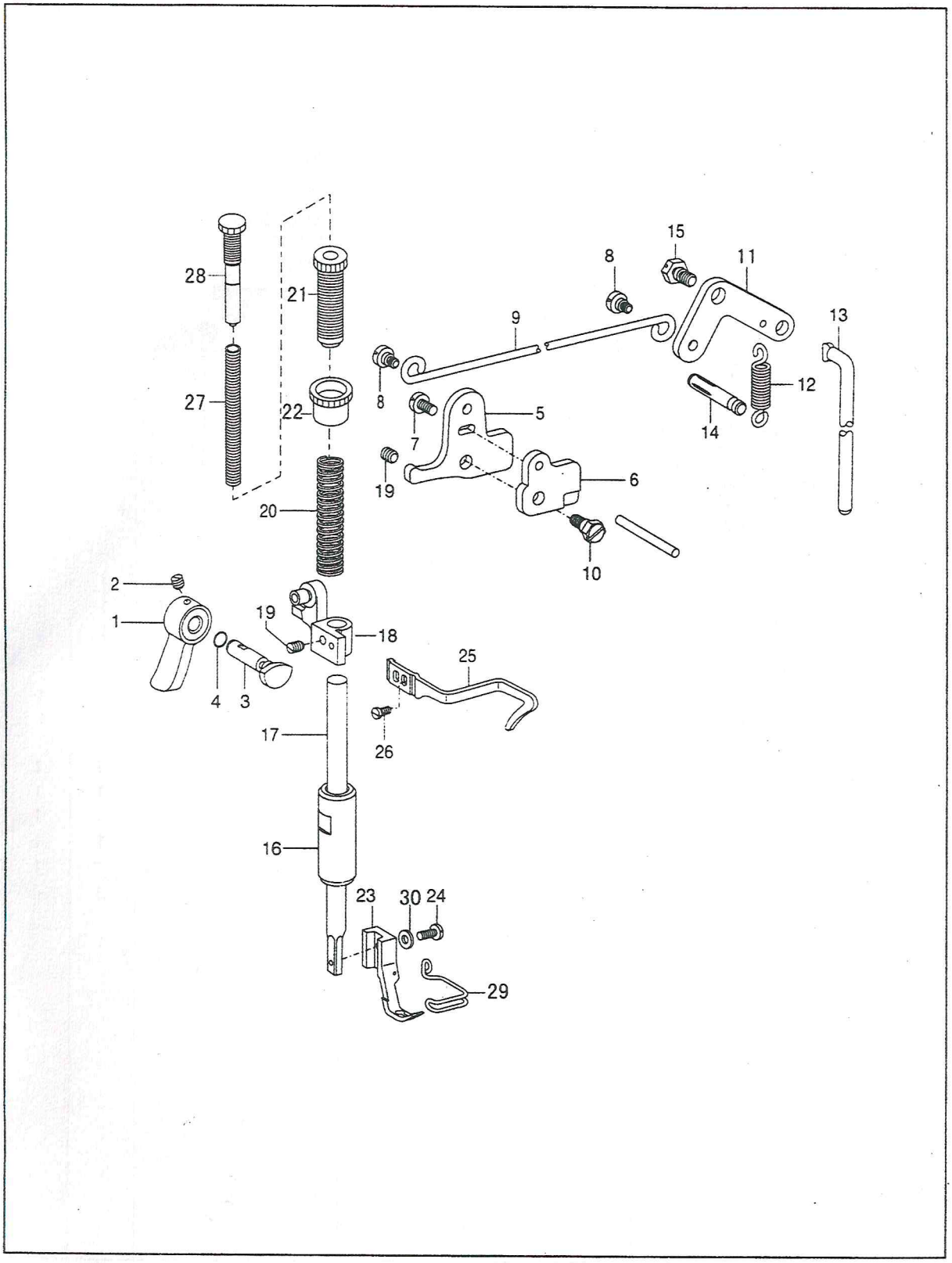

3. 压脚部件 Presser foot mechanism

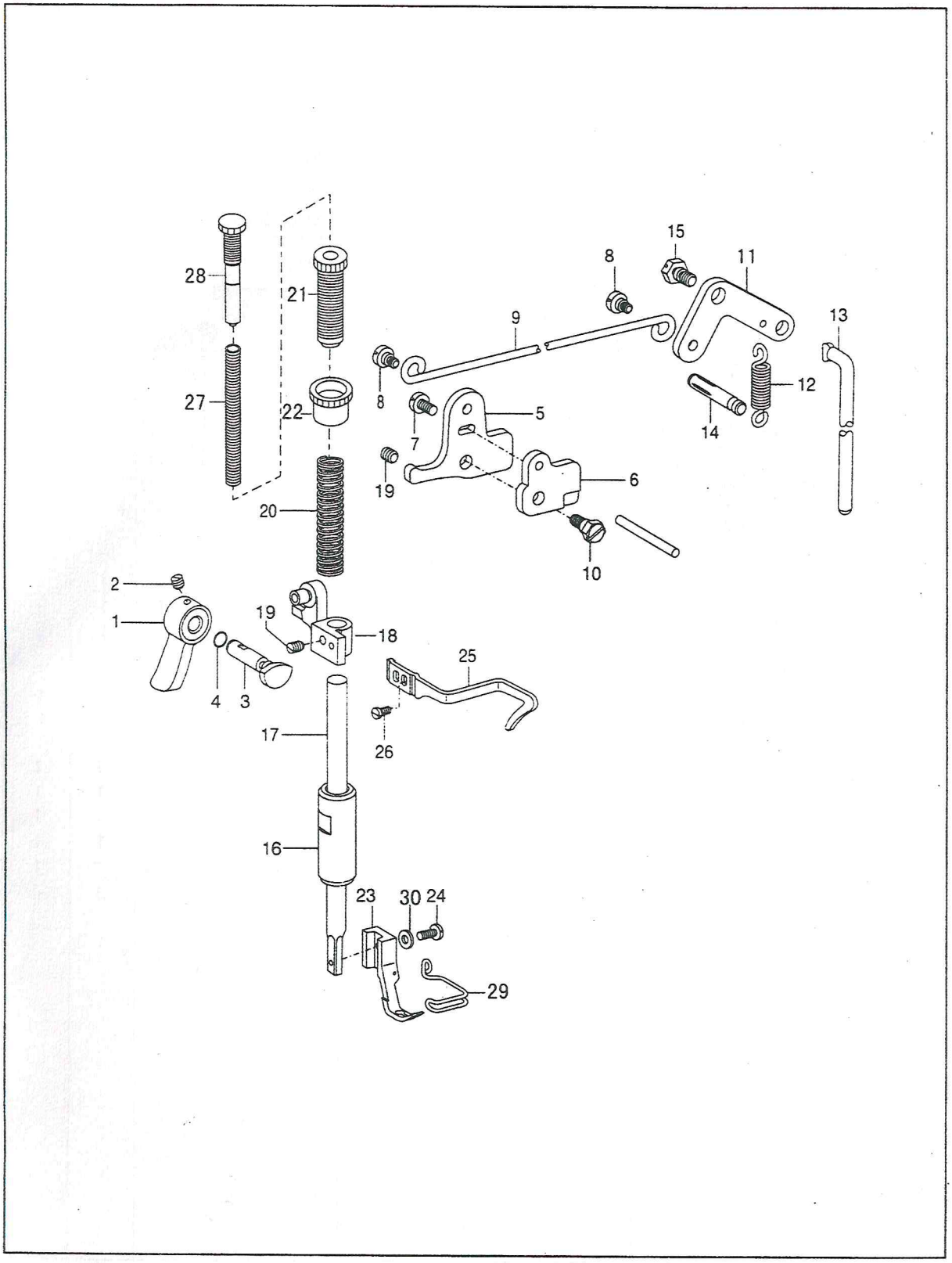

3. 压脚部件 Presser foot mechanism

序号 No.	图号 Part Number	零件名称 Name		数量 Qt. 0303D	6202D
1	33T3-003	压脚扳手	Presser bar lifter	1	1
2	22T1-011	压脚扳手螺钉	Screw	1	1
3	4WF3-002	压紧杆提升凸轮	Lifter crank	1	1
4		压紧杆提升凸轮油封	O ring	1	1
5	22T7-004B1a	膝控提升杠杆（左）	Lifter lever	1	1
6	2KT4-001	松线凸轮	Guide plate	1	1
7	22T7-004B1c	膝控提升杠杆（左）螺钉	Screw	1	1
8	22T7-004B2	铰链螺钉	Screw	2	2
9	1KT4-004	膝控提升拉杆	Collecting rod	1	1
10	22T7-005A	松线凸轮螺钉	Screw	1	1
11	22T7-007c1	膝控提升杠杆（右）	Lever	1	1
12	22T7-007c2	膝控提升杠杆（右）弹簧	Spring, extension	1	1
13	4WF3-001	膝控提升连杆	Knee lifter bar	1	1
14	22T7-008	弹簧销	Spring hook	1	1
15	22T7-005B	膝控提升杆杆（右）螺钉	Shoulder screw	1	1
16	34T3-305	压紧杆轴套	Bush	1	1
17	241WF5-001	压紧杆	Presser bar	1	1
18	7WF3-001	压紧杆导架	Guide bracket	1	–
		压紧杆导架	Guide bracket	–	1
19	61-04-01/B308	压紧杆导架螺钉	Screw	1	1
20	20T4-002	压紧杆弹簧	Spring, compression	1	1
21	233WF6-002	调压螺钉	Adjusting screw, presser	1	1
22	233WF6-003	调压螺钉锁紧螺母	Adjusting nut, presser	1	
23	7WF3-003	小压脚	Presser foot. inside	1	1
		压脚	Presser foot, inside	1	1
24	22T7-015	小压脚螺钉	Screw		
25	7WF3-002	大线勾	Thread guide	1	1
26	33T3-006	大线勾螺钉	Screw	1	1
27	233WF6-005	辅助调压弹簧	Adjusting spring	1	1
28	233WF6-004	辅助调压螺钉	Adjusting screw	1	1
29		防护勾	Safety finger	–	1
30	7WF3-004	小压脚螺钉垫片	Finger guard	1	1

4. 送料部件 Feed mechanism

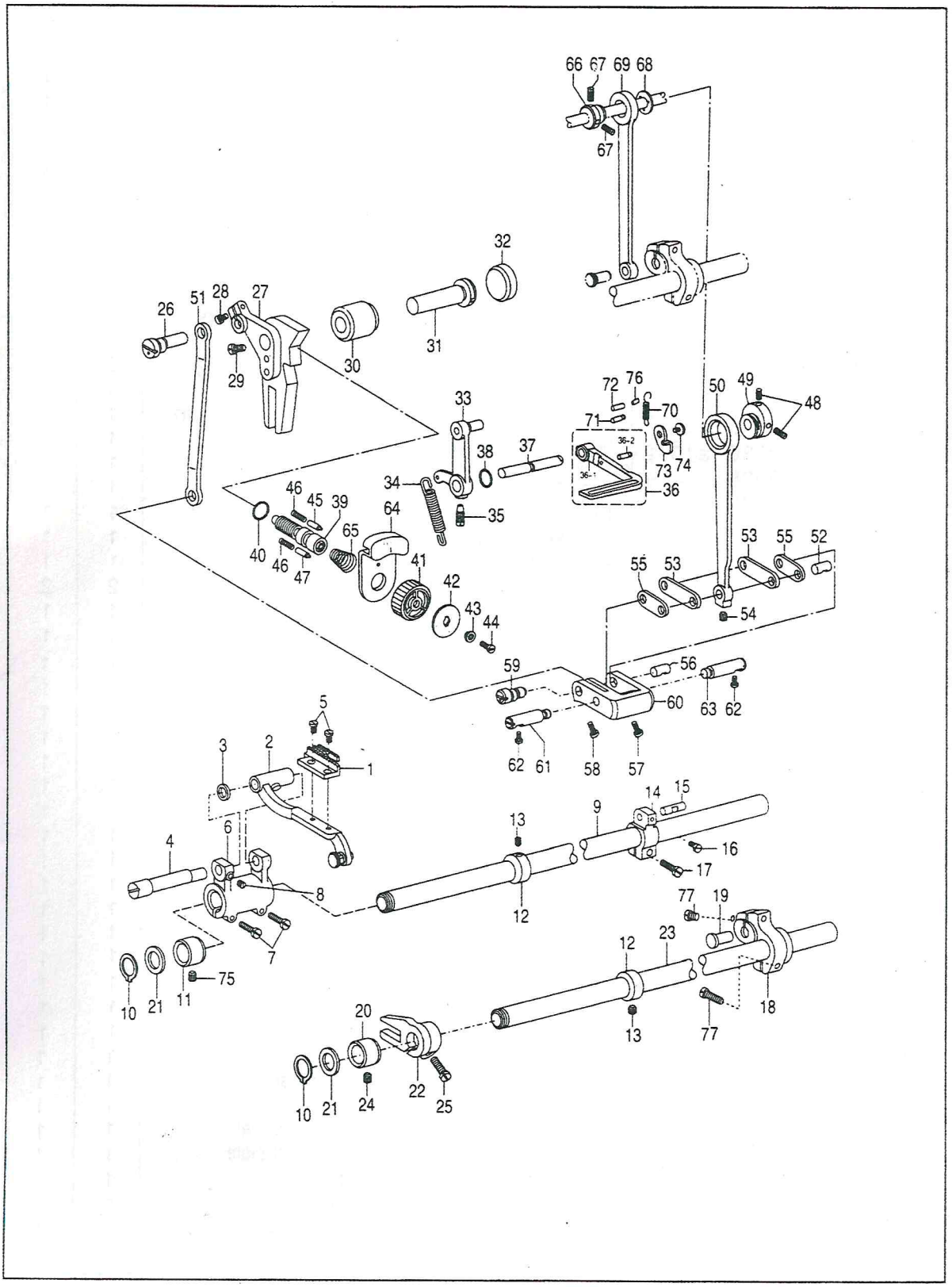

4. 送料部件 Feed mechanism

序号 No.	图号 Part Number	零件名称 Name		数量 Qt. 0303D	6202D
1	2KT3-001	送布牙	Feed dog	1	1
2	36T4-001A1a1	牙架小组件	Feed bar	1	1
3	51T5-001A6	牙架垫圈	Washer	1	1
4	36T4-001A2	牙架曲柄偏心轴	Shaft	1	1
5	J0.0.50	送布牙螺钉	Screw	2	2
6	4WF2-002	牙架曲柄	Feed rock arm	1	1
7	61-04-01/B504	牙架曲柄螺钉	Screw	2	2
8	22T2-019	牙架曲柄偏心轴螺钉	Screw	1	1
9	81WF3-003	送布轴	Feed shaft	1	1
10		轴用弹性挡圈	Retaining ring	2	2
11		送布轴前轴套	Bush, L	1	1
12	22T6-004	抬牙、送布轴紧圈	Collar	2	2
13	22T3-002B1	紧圈螺钉	Set screw	4	4
14	22T3-002B2	送布轴曲柄（右）	Feed rocker arm	1	1
15	4WF2-006	曲柄连杆短销	Stud	1	1
16	82T2-003C1a10-2	曲柄连杆短销螺钉	Set screw	1	1
17	36T5-008E5	送布轴曲柄(右)螺钉	Screw	1	1
18	22T6-008D3	抬牙后曲柄	Feed lifting arm	1	1
19	68WF3-011	抬牙轴曲柄铰链轴	Pin	1	1
20	22T6-007	抬牙轴前轴套	Bush, L	1	1
21	22T6-012	抬牙、送布轴前轴套垫圈	Washer	2	2
22	51T5-013	抬牙叉	Feed lifting arm	1	1
23	36T4-018H1D1	抬牙轴	Shaft	1	1
24	7WF2-001	抬牙轴前轴套螺钉	Screw	1	1
25	J0.0.5	抬牙叉夹紧螺钉	Screw	1	1
26	22T6-008D3	针距调节连杆销	Connecting stud	1	1
27	4WF2-012	针距座	Feed regulator	1	1
28	7WF2-012	针距座长螺钉	Screw, L	1	1
29	20T2-031	针距座短螺钉	Screw, S	1	1
30	22T5-010D4	针距座衬套	Bush	1	1
31	258WF4-002	针距座轴	Shaft	1	1
32	22T5-004	橡皮塞（Φ 15.7）	Rubber cap	1	1
33	258WF4-003	倒缝操纵杆曲柄组件	Pin assy. Lever	1	1
34	7WF2-009	倒缝操纵杆曲柄弹簧	Spring, extension	1	1
35	1KT3-002	操纵杆曲柄螺钉	Screw	1	1
36	22T5-013	倒缝扳手组件	Reverse stitching lever assy	1	1
36-1	2KT3-003	倒缝扳手	Reverse stitching lever	1	1
36-2	2KT3-003a	倒缝扳手销	Spring hook pin	1	1
37	2KT3-003b	倒缝扳手轴	Shaft	1	1
38	2KT3-002	倒缝扳手轴O型圈	O ring	1	1
39		针距调节螺杆	Adjusting screw	1	1
40	36T5-007D1	O型橡胶圈	O ring	1	1
41	33T2-030-A	针距盘	Stitch length dial	1	1
42	36T5-007D2	针距标盘	Stitch length plate	1	1
43	4WF2-004A	标盘螺钉衬套	Support bush	1	1
44	36T5-007D4	针距盘螺钉	Screw	1	1
45	36T5-007D5	止动销	Positioning pin	1	1

4. 送料部件 **Feed mechanism**

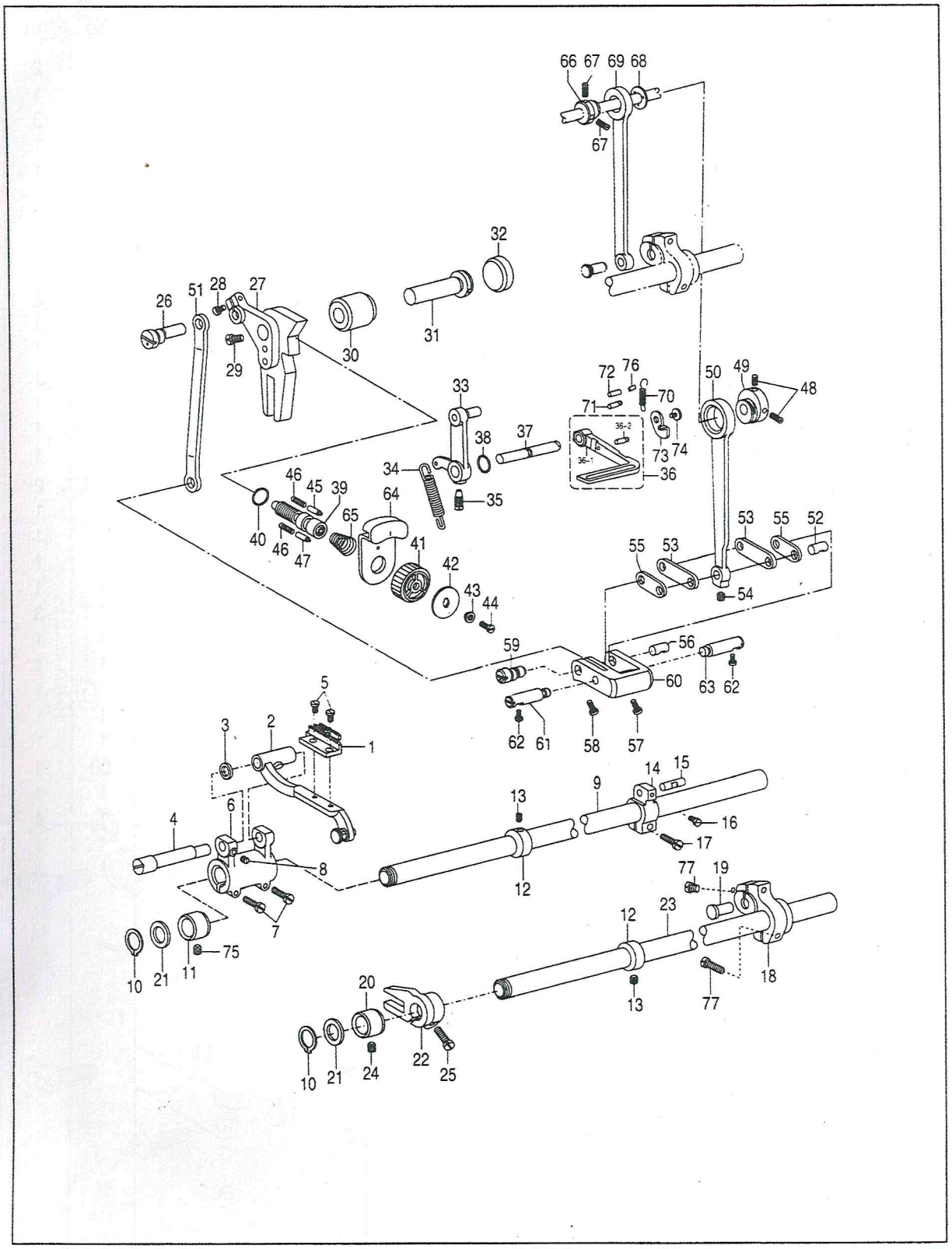

4. 送料部件 Feed mechanism

序号 No.	图号 Part Number	零件名称 Name		数量 Qt. 0303D	数量 Qt. 6202D
46	22T5-009	止动销弹簧	Spring	2	2
47	7WF2-006	针距盘挡销	Stopper pin	1	1
48	36T3-003D$_2$	送布凸轮螺钉	Set screw	3	3
49	36T5-008E$_1$	送布凸轮	Feed cam	1	1
50	4WF2-009A	送布连杆	Feed connecting rod	1	1
51	4WF2-009B	针距调节连杆	Connecting rod	1	1
52	82T2-003C1a10-1	曲柄连杆长销	Stud	1	1
53	36T5-008E4H02	曲柄长连杆	Link	2	2
54	36T5-008E5	送布连杆螺钉	Set screw	1	1
55	36T5-008E4H01	曲柄短连杆	Link	2	2
56	36T5-008E6	曲柄连杆短销	Shaft	1	1
57	36T5-008E7	短连杆销螺钉	Screw	1	1
58	36T5-008E8	连杆偏心轴螺钉	Screw	1	1
59	36T5-008E9	连杆偏心轴	Shaft	1	1
60	36T5-008E10	针距调节曲柄	Feed regulator crank	1	1
61	5WF1-002	针距调节曲柄定位销(左)	Pin shaft, L	1	1
62	22T6-008D3	左、右定位销螺钉	Screw	2	2
63	5WF1-001	针距调节曲柄定位销(右)	Pin shaft, R	1	1
64	7WF2-005	针距按键	Stopper	1	1
65	36T5-011	针距按键簧	Spring	1	1
66	36T3-003D$_1$	抬牙凸轮	Eccentric wheel	1	1
67	36T3-003D$_2$	抬牙凸轮螺钉	Screw	3	3
68	36T3-004	凸轮隔离片	Holder	1	1
69	22T3-009D1C	抬牙连杆	Feed lifting rod	1	1
70	2KT3-008	倒缝扳手拉簧	Spring	1	1
71	2KT3-009	弹簧挂销	Spring hook	1	1
72	2KT3-006	倒缝扳手限位销	Pin	1	1
73	2KT3-004	倒缝扳手板	Plate	1	1
74	2KT3-005	倒缝扳手轴螺钉	Screw	1	1
75	J0.0.35	送布轴前轴套螺钉	Screw	1	1
76	2KT3-007	销套	Pin shaft	1	1
77	17WF4-021	抬牙右曲柄螺钉	Screw	1	1

5、上送料部件 Upper feed mechanism

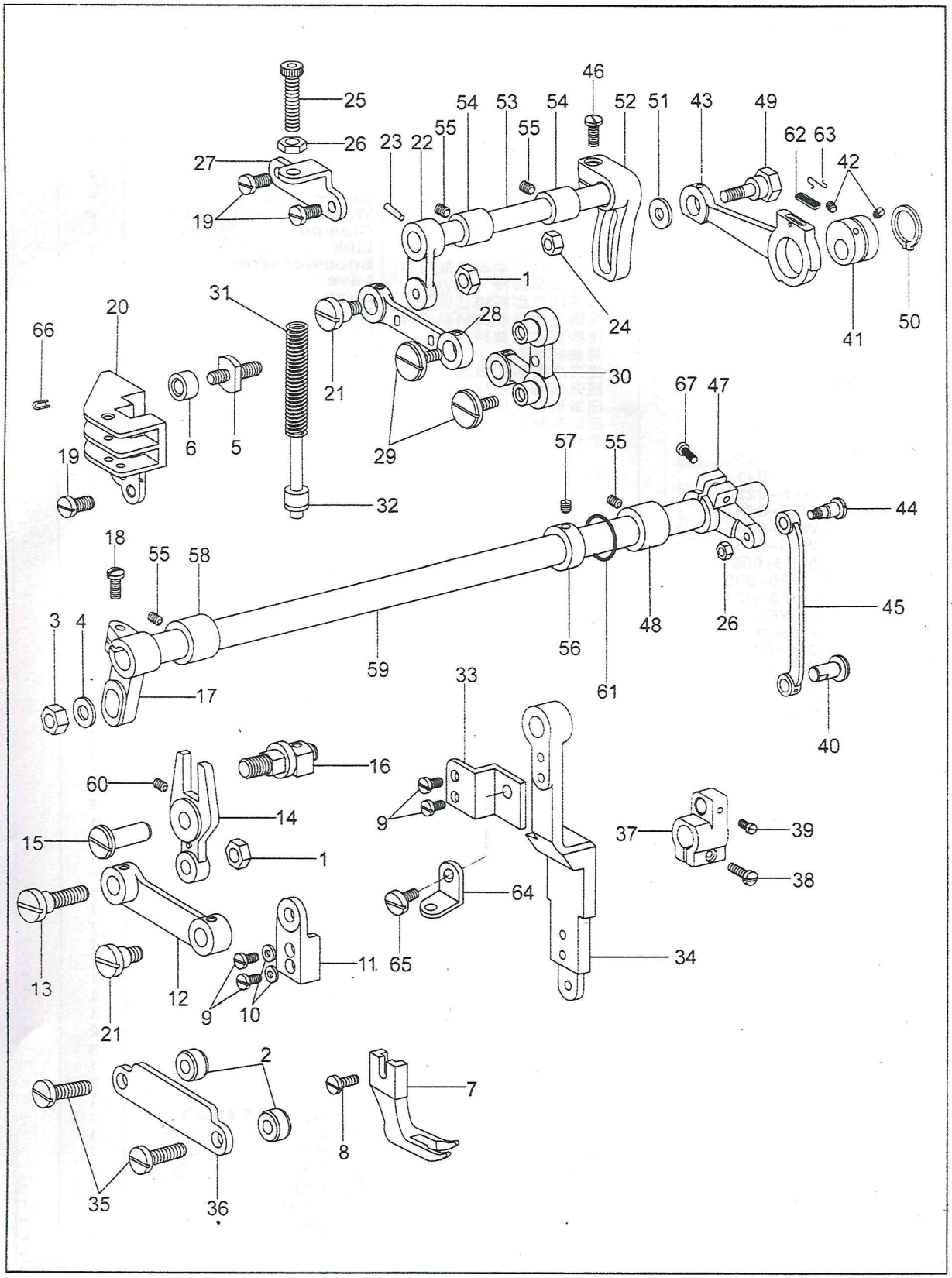

5、上送料部件 Upper feed mechanism

序号 No.	图号 Part Number	零件名称 Name		数量 Qt. 0303D	6202D
1	7WF5-001	压脚送料变动连接螺母	Nut	2	–
2	7WF5-002	压脚连杆压板垫块	Collar	2	–
3	7WF5-003	压脚曲柄连接螺母	Nut	1	–
4		压脚曲柄连接垫圈	Washer	1	–
5	7WF5-004	送料曲柄导柱轴	Roller shaft	1	–
6	7WF5-005	提升压脚导柱轴滚柱	Roller	1	–
7	11WF5-001	摆压脚	Walking foot	1	–
8	61-04-01/B316	压脚螺钉	Screw	1	–
9	7WF5-008	摆动连杆座螺钉	Screw	4	–
10		摆动连杆座螺钉弹簧垫圈	Washer	2	–
11	7WF5-009	摆压脚杆座	Clamper	1	–
12	7WF5-010	摆压脚连杆	Link	1	–
13	7WF5-011	压脚送料变动连接螺钉	Shoulder screw	1	–
14	7WF5-012	摆压脚叉型杆	Lever	1	–
15	7WF5-013	摆压脚叉型杆销	Shaft	1	–
16	7WF5-014A	压脚送料变动曲柄轴组件	Roller shaft assy.	1	–
17	233WF5-023	压脚摆动前曲柄	Crank	1	–
18	1WF4-032	前曲柄螺钉	Screw	2	–
19	22T2-019	提升压脚导位板螺钉	Screw	4	–
20	7WF5-018	提升压脚导位板	Lever guide	1	–
21	7WF5-019	压脚送料曲柄连杆螺钉	Screw	2	–
22	7WF5-020	压脚升降前曲柄	Feed lifting arm crank, L	1	–
23		圆锥销	Pin	1	–
24	7WF5-050	六角螺母	Nut	1	–
25	7WF5-021	摆压脚调压螺钉	Screw	1	–
26	7WF5-022	摆压脚调压螺母	Nut	2	–
27	7WF5-023	摆压脚调压螺钉架	Bracket	1	–
28	7WF5-024	压脚送料曲柄连杆	Link	1	–
29	7WF5-025	压脚送料曲柄螺钉	Screw	2	–
30	258F3-005	压脚送料曲柄	Feed lever	1	–
31	81WF6-003	摆压脚调压杆弹簧	Spring, compression	1	–
32	81WF6-004	调压杆弹簧导柱	Guide shaft	1	–
33	241WF3-001	提升压脚导柱定位板	Holder plate	1	–
34	7WF5-030	摆压脚杆	Connecting rod	1	–
35	22T6-008D$_3$	提升压脚连接压板螺钉	Screw	2	–
36	7WF5-031	提升压脚连接压板	Rod guide	1	–
37	5WF4-002	送布轴曲柄（中）	Feed rocker arm	1	–
	258WF3-003	送布轴曲柄（中）	Feed rocker arm	–	–
38	61-04-01/B504	送布轴曲柄（中）螺钉	Screw	1	–
39	36T5-008E$_5$	大连杆曲柄连接销钉	Set screw	1	–
40	5WF4-001	大连杆曲柄连接销	Stud	1	–
	258WF3-004	大连杆曲柄连接销	Eccentric wheel	–	–
41	7WF5-032	压脚升降偏心轮	Screw	1	–
42	22T2-005B$_3$	螺钉	Connecting rod	2	–
43	7WF5-034	连杆组件	Shoulder screw	1	–
44	7WF5-037	压脚摆动后曲柄连杆螺钉	Connecting rod	1	–
45	7WF5-038	摆压脚大连杆	Shoulder screw	1	–
	258WF3-002	摆压脚大连杆	Feed lifting arm crank, R	–	–
46	7WF5-039	偏心连杆调节曲柄螺钉	Bush, M	1	–
47	241WF3-003	压脚摆动后曲柄	Screw	1	–
48	241WF3-005	压脚摆动轴中轴套	Retaining ring, C	1	–
49	7WF5-042	偏心轮连杆螺钉	Washer	1	–
50		轴用C型挡圈	Feed arm	1	–
51	7WF5-049	垫圈	Feed lifting shaft	1	–
52	7WF5-043	偏心连杆调节曲柄	Bush	2	–
53	7WF5-044	压脚升降轴	Screw	3	–
54	7WF5-045	摆压脚提升轴套	Collar	1	–
55	61-04-01/B308	摆动升降轴套支头螺钉	Screw	2	–
56	22T3-002B$_1$	压脚摆动轴紧圈	Bush, L	1	–
57	22T3-002B$_2$	压脚摆动轴紧圈螺钉	Upper feed shaft	1	–
58	1KT2-004	压脚摆动轴前轴套	Screw	1	–
59	241WF3-004	压脚摆动轴	O ring	1	–
60	7WF5-048	摆压脚叉型杆销螺钉	Oil felt	1	–
61	33T2-030-A	O型圈	Spring	1	–
62	7WF5-035	偏心轮连杆油毡	Bracket	1	–
63	1WF5-024	偏心轮连杆油毡压簧	Screw	1	–
64	241WF3-002	提升压脚导柱架	Pin	2	–
65	241WF3-006	导柱架螺钉	Screw	1	–
66	1WF5-024	弹性圆锥销			
67	16WF3-031	后曲柄螺钉			

6. 旋梭部件 Hook mechanism

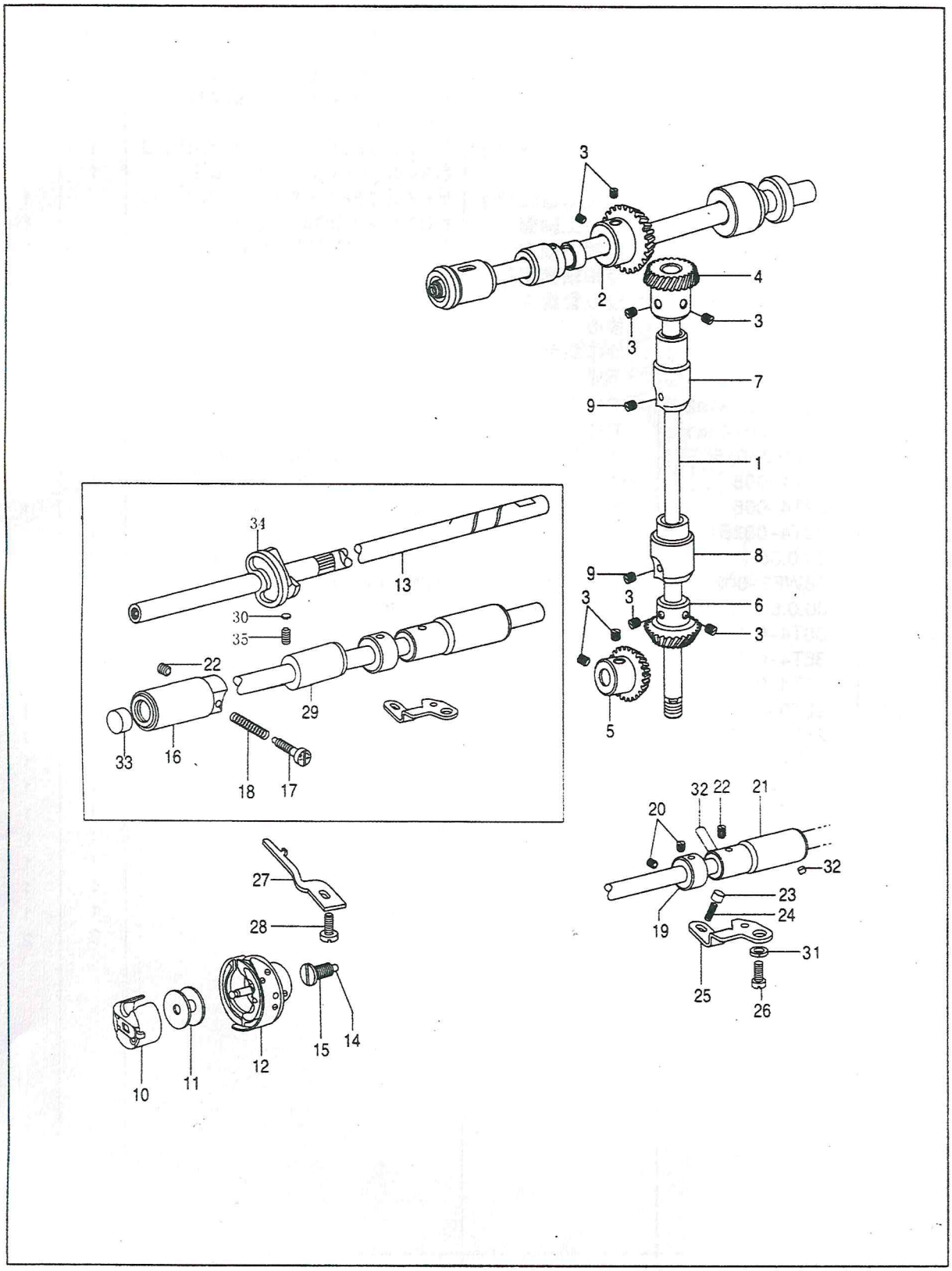

6. 旋梭部件 Hook mechanism

序号 No.	图号 Part Number	零件名称 Name		数量 Qt. 0303D	6202D
1	15WF1-001	竖轴	Vertical shaft	1	1
2	ZOA140379	上轴伞齿轮	Bevel gear, upper shaft	1	1
3	22T2-005B3	伞齿轮螺钉	Set screw	8	8
4	ZOA140380	竖轴伞齿轮(上)	Bevel gear, vertical shaft, U	1	1
5	ZOA140383	下轴伞齿轮	Bevel gear, lower shaft	1	1
6	ZOA140382	竖轴伞齿轮(下)	Bevel gear, vertical shaft, L	1	1
7	2KT1-015	竖轴上轴套	Bush, vertical shaft, U	1	1
8	2KT1-008	竖轴下轴套	Bush, vertical shaft, L	1	1
9	J0.0.40	竖轴轴套螺钉	Screw	2	2
10	151845001	梭心套组件	Bobbin case	1	1
11	24WF2-001	梭心	Bobbin	1	1
12	159793901	旋梭组件	Hook assy.	1	1
13	122WF3-001	下轴	Lower shaft	1	1
14	22T4-001A1a2	下轴滤油塞	Filter	1	1
15	22T4-001A1a1	下轴滤油塞螺钉	Screw	1	1
16	68WF3-015	下轴前轴套	Bush, lower shaft, L	1	1
17	22T4-005	油量调节螺钉	Adjusting screw, oil	1	1
18	22T4-006	油量调节弹簧	Adjusting spring	1	1
19	22T4-002B1	下轴紧圈	Collar	1	1
20	J0.0.35	下轴紧圈螺钉	Screw	2	2
21	68WF3-002	下轴轴套（右）	Bush, lower shaft, R	1	1
22	J0.0.5	下轴轴套螺钉	Screw	2	2
23	36T4-015	柱塞	Plunger	1	1
24	36T4-016	柱塞弹簧	Spring	1	1
25	22T4-010	挡板	Holder plate	1	1
26	22T9-006	挡板螺钉	Screw	1	1
27	2KT1-013	旋梭定位勾	B/case holder position bracket	1	1
28	22T4-015	旋梭定位勾螺钉	Screw	1	1
29	68WF3-016	下轴中轴套	Bush, lower shaft, M	1	1
30	2KT5-032	切线凸轮螺钉垫片	Trimming cam	1	1
31		挡板螺钉弹簧垫圈	Washer	1	1
32	22T4-007C2	下轴轴套油管	Oil tube	1	1
33	68WF3-014	下轴油封	Oil seal	1	1
34	233WF4-010	切线凸轮	Thred shear cam	1	1
35	2KT5-031	切线凸轮螺钉	Screw	2	2

7. 供油润滑部件 Lubrication mechanism

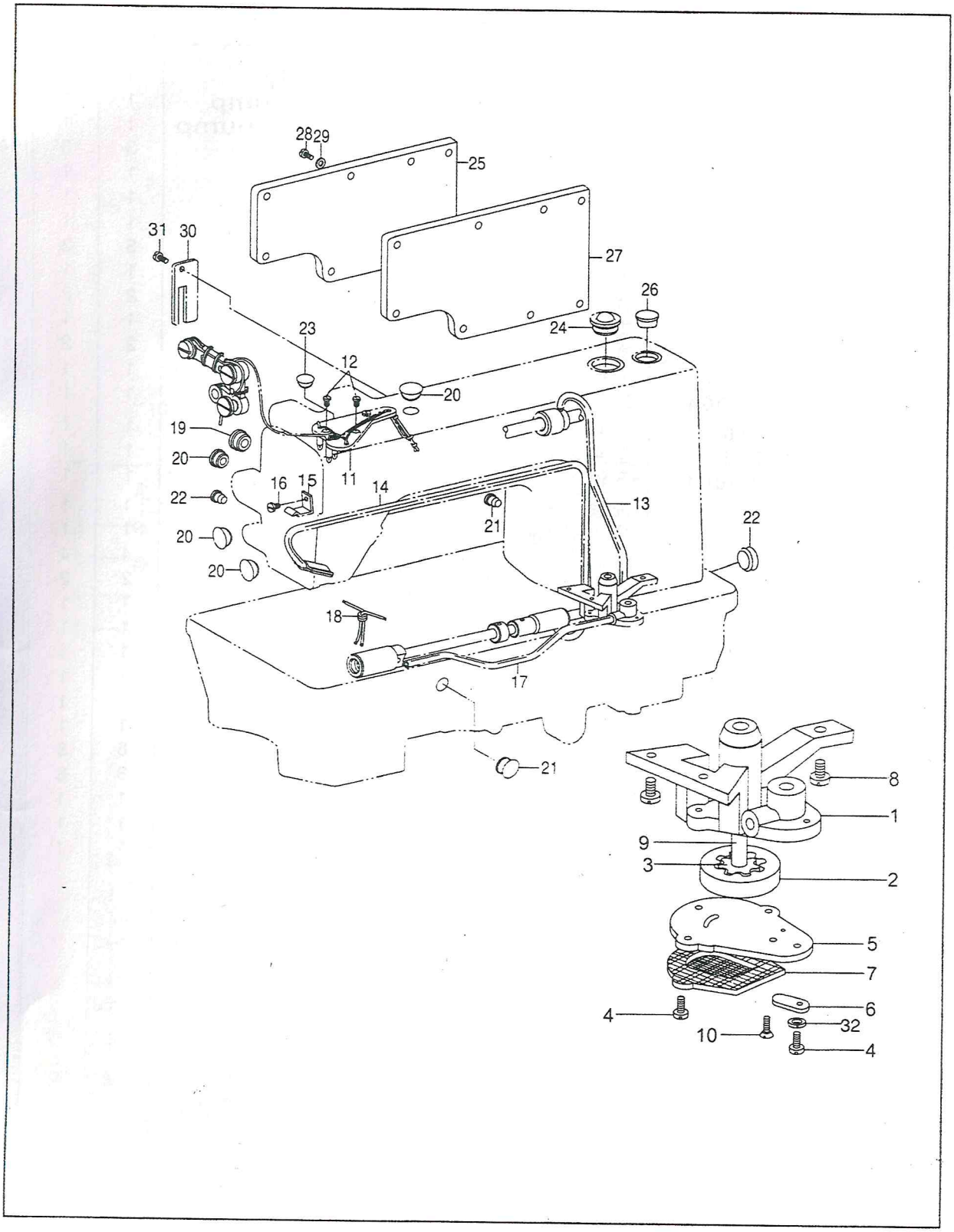

7. 供油润滑部件 Lubrication mechanism

序号 No.	图号 Part Number	零件名称 Name		数量 Qt. 0303D	6202D
1	15WF4-003	油泵体	Pump body	1	1
2	15WF4-006	油泵大齿轮	Big gear, pump	1	1
3	15WF4-007	油泵小齿轮	Small gear, pump	1	1
4		油泵调节板螺钉	Screw	3	3
5	15WF4-004	油泵体盖板	Cover	1	1
6	22T8-007	油泵调节板	Throat plate	1	1
7	22T8-008A	油泵滤网组件	Filter set	1	1
8	22T8-009	油泵体螺钉	Screw	3	3
9	15WF4-005	油泵体短轴	Shaft	1	1
10		油泵体盖板螺钉	Screw	2	2
11	7WF4-016	油线固定板大组件	Setting plate	1	1
12	22T8-012	油线固定板螺钉	Screw	2	2
13	22T8-013D	上轴油管组件	Oil tube, U	1	1
14	242WF1-004	回油管组件	Tube assy.	1	1
15	22T8-016	回油管夹	Tube carrier	1	1
16	20T4-006	回油管夹螺钉	Screw	1	1
17	122WF5-001	下轴油管组件	Oil tube	1	1
18		油线	Oil wick	1	1
19	22T1-003C3	橡皮塞（Φ 19）	Rubber cap	1	1
20	22T1-003C4	橡皮塞（Φ 11.8）	Rubber cap	4	4
21	22T1-015	橡皮塞（Φ 8.8）	Rubber cap	2	2
22	22T1-016	橡皮塞（Φ 27）	Rubber cap	1	1
23	22T1-017	橡皮塞（Φ 5.7）	Rubber cap	1	1
24	22T1-008	油窗组件	Oil gauge window	1	1
25	241WF1-005	后盖板	Back cover	1	1
26	13WF2-035	橡皮塞（Φ25.5）	Rubber cap	1	1
27	241WF1-006	后盖板密封垫片	Packing	1	1
28	22T1-006	后盖板螺钉	Screw	8	8
29	22T1-007	后盖板螺钉垫片	Washer	8	8
30	7WF4-011	小挡油板	Oil pan	1	1
31	33T3-006	小挡油板螺钉	Screw	1	1
32		弹簧垫圈	Washer	1	1

8.剪线部件 Thread trimming mechanism

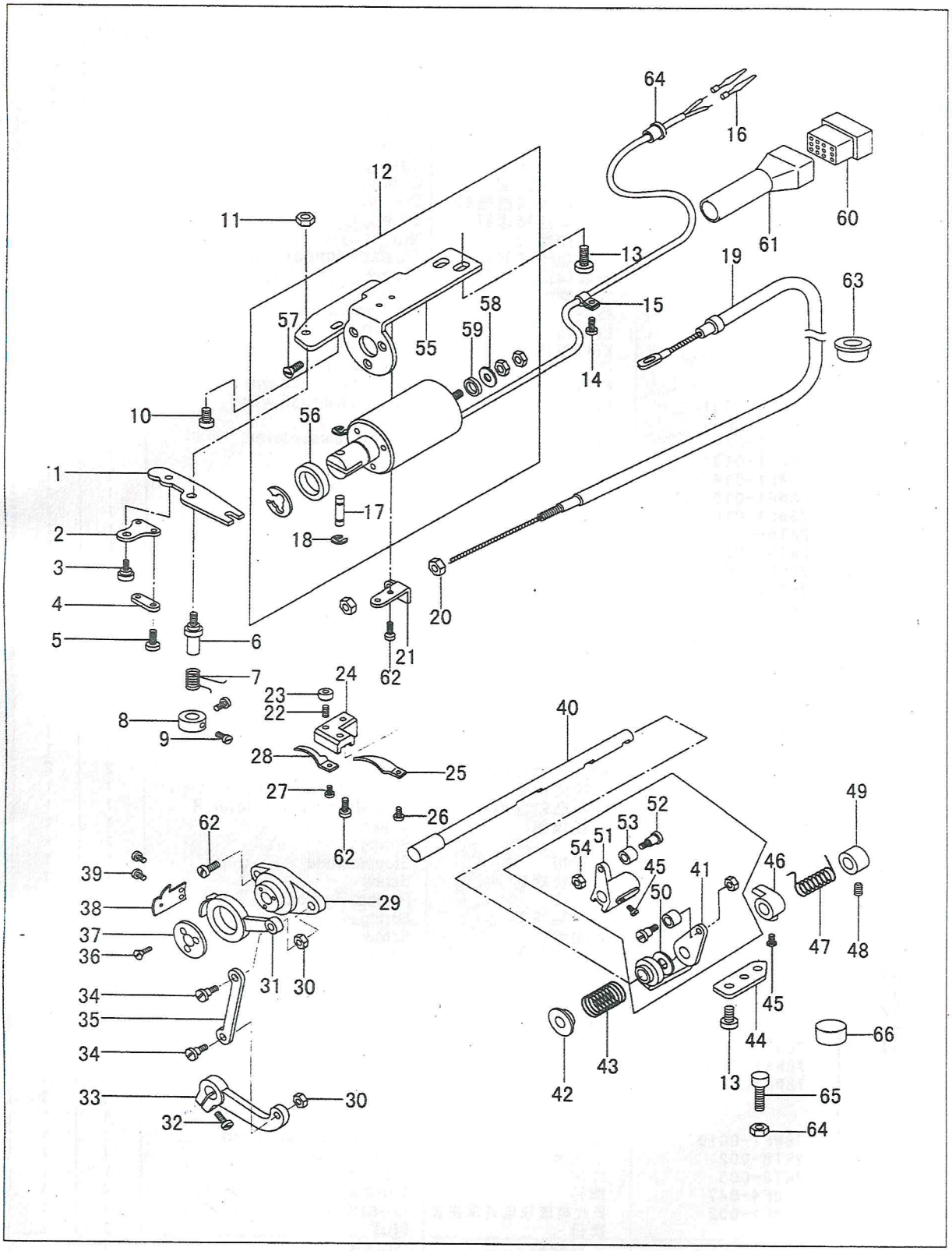

8.剪线部件 Thread trimming mechanism

序号 No.	图号 Part Number	零件名称 Name		数量 Qt. 0303D	6202D
1	78WF1-004	驱动板	Driven plate	1	1
2	78WF1-005	软线支撑板	Wire support	1	1
3	78WF1-006	软线支撑板螺钉	Screw	1	1
4	78WF1-007	软线连板	Link	1	1
5	37T2-203	软线连板螺钉	Screw	1	1
6	78WF1-008	驱动板轴	Screw pin, driven plate	1	1
7	78WF1-009	驱动板弹簧	Spring	1	1
8	78WF1-010	驱动板轴紧圈	Collar	1	1
9	1WF1-024	驱动板轴紧圈螺钉	Screw	2	2
10	22T4-015	安装架连接螺钉	Screw	1	1
11	36WF5-008	驱动轴螺母	Nut	1	1
12	78WF1-001	剪线电磁铁转动组件	Thread trimmer solenoid assy	1	1
13	36WF1-056	安装架固定螺钉	Screw	4	4
14	21WF4-047	线夹螺钉	Screw	1	1
15	84WF1-022	线夹	Wire holder	1	1
16	2KT6-001C	插头接头	Terminal pin	2	2
17	78WF1-001A	剪线电磁铁销	Pin	1	1
18		挡圈	Retaining ring	2	2
19	241WF6-001	松线钢绳组件	Tension release wire	1	-
	258WF6-001	松线钢绳组件	Tension release wire	-	1
20	2KT4-020	软线螺母	Nut	2	2
21	78WF1-012	软线座	Tension release lever	1	1
22	78WF1-013	定刀座螺钉	Screw	1	1
23	78WF1-014	定刀座螺母	Nut	1	1
24	78WF1-015	定刀座	Holder, F-knife	1	1
25	78WF1-016	栏线板	Lower thread finger	1	1
26	2KT6-017	栏线板螺钉	Screw	1	1
27	2KT5-002	定刀片螺钉	Screw	1	1
28	78WF1-002	定刀片	Fixed knife	1	1
29	78WF1-017	刀架	Holder, M-knife	1	1
30	2KT5-013	刀轴连杆螺母	Nut	2	2
31	78WF1-018	刀架（左）	Holder, M-knife, L	1	1
32	22T6-008D3	驱动曲柄螺钉	Screw	1	1
33	78WF1-019	剪线电磁铁驱动曲柄	Driven crank	1	1
34	78WF1-020A	刀架连杆螺钉	Screw	2	2
35	78WF1-020	刀架连杆	Link	1	1
36	78WF1-021	刀架螺钉	Screw	3	3
37	78WF1-022	刀架垫圈	Washer	1	1
38	78WF1-003	动刀片	Movable knife	1	1
39	2KT5-007	动刀片紧固螺钉	Screw	2	2
40	78WF1-023	凸轮曲柄轴	Thread trimmer cam lever shaft	1	1
41	78WF1-024B	切线凸轮右曲柄	Thread trimmer cam lever, R	1	1
42	78WF1-025	扭簧端盖	Collar	1	1
43	78WF1-026	扭簧	Spring	1	1
44	241WF6-002	止动板	Stopper plate	1	1
45	21WF3-010	限位块螺钉	Screw	3	3
46	78WF1-028	限位块	Positioning block	1	1
47	78WF1-029	凸轮轴扭簧	Spring	1	1
48	22T3-002B2	紧圈螺钉	Screw	2	2
49	78WF1-030	凸轮轴紧圈	Collar	1	1
50	78WF1-024F	塑料圈	Plastic ring	1	1
51	78WF1-024A	切线凸轮左曲柄	Thread trimmer cam lever, L	1	1
52	78WF1-024C	滚轮螺钉	Screw	2	2
53	78WF1-024D	滚轮	Roller	2	2
54	78WF1-024E	滚轮螺母	Nut	2	2
55	78WF1-001B	剪线电磁铁安装架	Thread trimmer solenoid base	1	1
56	78WF1-001C	密封垫圈（大）	Seal washer, big	1	1
57		剪线电磁铁紧固螺钉	Screw	3	3
58		平垫片	Washer	1	1
59	78WF1-001D	密封垫圈（小）	Seal washer, small	1	1
60	2KT8-002	插头套	Connector	1	1
61	2KT8-003	线罩	Cover	1	1
62	21WF4-047	螺钉	Screw	4	4
63	78WF1-032	剪线电磁铁电线保护套	Guard	1	1
64		螺母	Nut	1	1
65	241WF6-003	止动螺钉	Screw	1	1
66	241WF6-004	缓冲垫	Packing	1	1

9. 倒缝部件 Reverse stitching mechanism

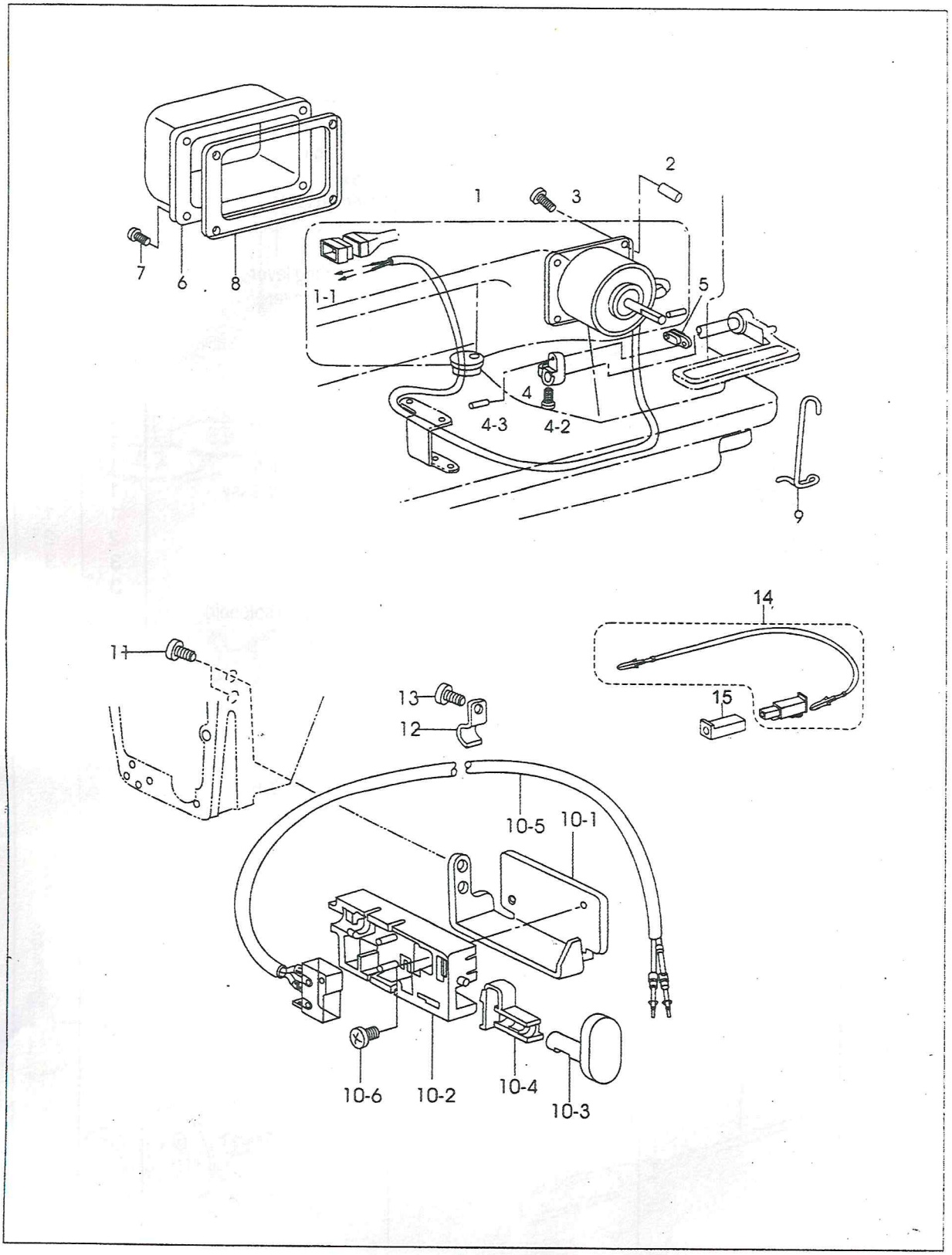

9. 倒缝部件 Reverse stitching mechanism

序号 No.	图号 Part Number	零件名称 Name		数量 Qt. 0303D	数量 Qt. 6202D
1	2KT6-001	倒缝电磁铁组件	Quick reverse solenoid assy	1	1
1-1	2KT6-001C	插头	Terminal pin	2	2
2	2KT6-006	衬管	Space collar	4	4
3	2KT6-007	衬管螺钉	Screw	4	4
4-1	2KT6-004	倒缝电磁铁曲柄	Solenoid lever	1	1
4-2	2KT5-015	曲柄螺钉	Screw	1	1
4-3	2KT6-003	倒缝电磁铁曲柄连杆销	Pin	1	1
5	2KT6-002	倒缝电磁铁连杆	Connecting lever	1	1
6	2KT6-008	倒缝电磁铁罩	Solenoid cover	1	1
7	22T1-006	倒缝电磁铁螺钉	Screw	4	4
8	2KT6-009	倒缝电磁铁罩垫片	Washer	1	1
9	2KT3-011	倒缝操纵曲柄弹簧钩	Cord holder	1	1
10-1	2KT6-011	倒缝电磁铁开关安装架	Support	1	1
10-2	2KT6-013	倒缝按键开关座	Base	1	1
10-3	2KT6-015	倒缝按键开关	Actuator	1	1
10-4	2KT6-014	倒缝电磁铁开关触件	Spring, R-switch	1	1
10-5	2KT6-016	倒缝开关组件	Reverse switch assy.	1	1
10-6		倒缝按键开关座螺钉	Screw	1	1
11	2KT6-012	开关安装架螺钉	Screw	2	2
12	2KT5-040	线夹	Cord holder	3	3
13	2KT6-017	线夹螺钉	Screw	3	3
14	2KT6-018	倒缝电磁铁组件	Wire, reverse solenoid	1	1
15	2KT6-019	接头(2)	Connector	1	1

10. 0303D 附件 Accessories

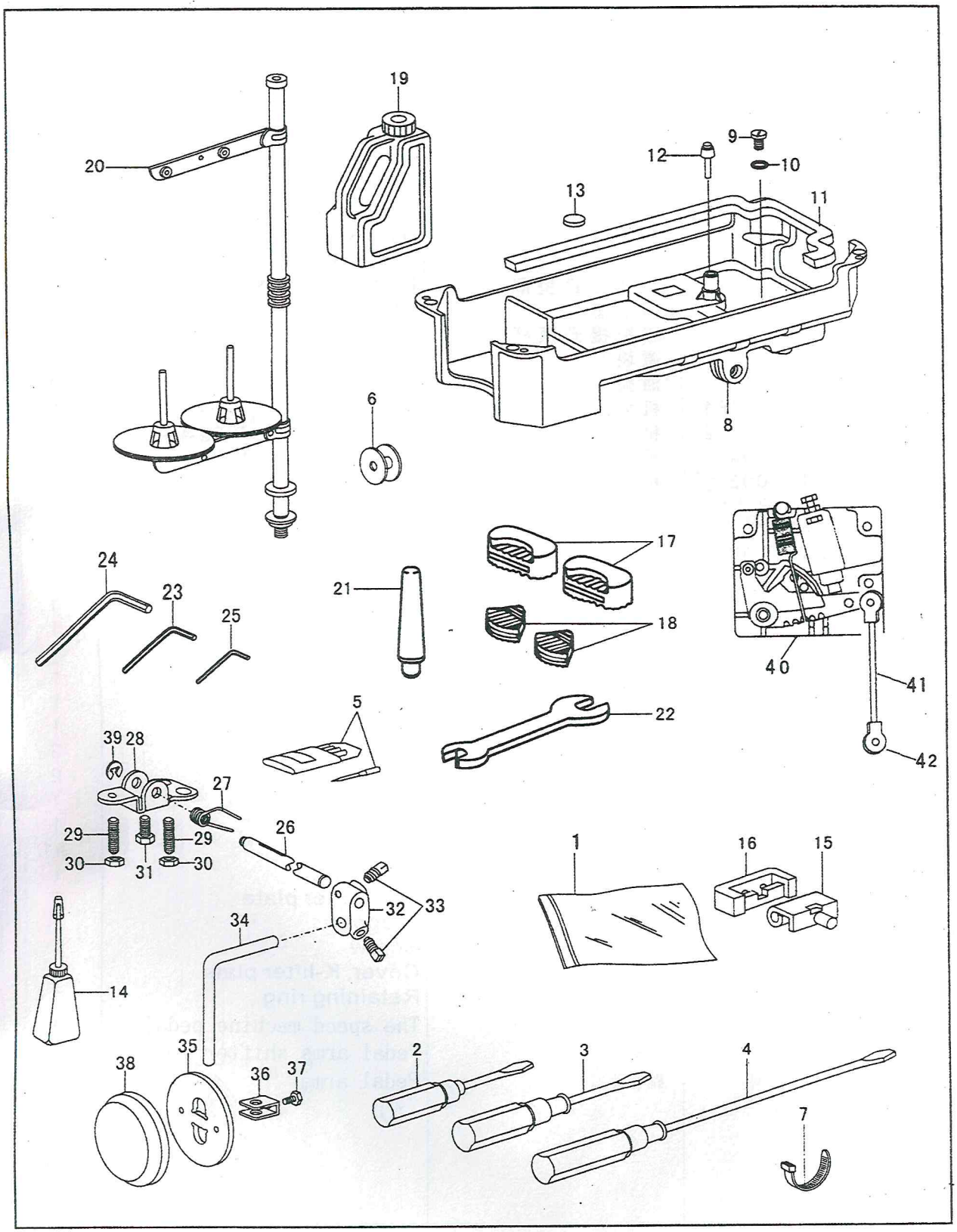

10. 0303D 附件 Accessories

序号 No.	图号 Part Number	零件名称 Name		数量 Qt. 0303D
1	33TF-010	零件袋	Accessory bag	1
2	33TF-014	一字开刀（小）	Screw driver, S	1
3	33TF-013	一字开刀（中）	Screw driver, M	1
4	33TF-012	一字开刀（大）	Screw driver, L	1
5		机针	Needle	4
6	24WF2-001	梭芯	Bobbin	3
7	129WF1-016	捆扎带	Bobbin thread winder assy.	3
8	122WF7-005	油盘	Screw	1
9	22T9-001A2	放油螺钉	Washer	1
10	22T9-001A3	放油螺钉垫圈	Belt guard assy.	1
11	2KT9-008	油盘垫	Screw	1
12	4WF5-002	膝控提升顶杆	Washer	1
13	22T9-012	磁块	Screw	1
14	33TF-011	油壶	Oil pot	1
15	22T9-007F1	机壳铰链	Head hinge	2
16	22T9-007F2	机壳铰链套	Cushion, head hinge	2
17	1KT5-004	机头防震垫块（大）	Head cushion, L	2
18	1KT5-003	机头防震垫块（小）	Head cushion, S	2
19	1F-012	油箱	Oil tank	1
20	4F-007	线架组件	Thread stand assy.	1
21	1KT5-007	机头撑杆	Head rest	1
22		呆扳手	Wrench	1
23		2mm内六角扳手	Wrench, 2mm	1
24		3mm内六角扳手	Wrench, 3mm	1
25		2.5mm内六角扳手	V-belt	1
26	22T9-001A6	膝控铰链轴	Lifter shaft	1
27	22T9-001A7	膝控复位弹簧	Spring	1
28	22T9-001A8	膝控限位架	Bracket	1
29	22T9-001A9	膝控限位调节螺钉	Adjusting screw	2
30	22T9-001A10	调节螺母	Adjusting nut	2
31	22T9-036	膝控限位架螺钉	Screw	1
32	22T9-003B3	碰块弯杆接头	Bracket	1
33		碰块弯杆接头螺钉	Screw	各1
34	22T9-003B2	膝控碰块弯杆	Lifter bar	1
35	22T9-003B5	膝控碰块	Knee lifter plate	1
36	22T9-003B6	碰块架	Stopper	1
37	22T9-003B7	碰块架螺钉	Screw	1
38	22T9-003B8	碰块垫	Cover, K-lifter plate	1
39		开口挡圈	Retaining ring	1
40		控速器踏板	The speed machine pedal	1
41		踏板旋臂拨杆	Pedal arms shifter lever	1
42		踏板旋臂	Pedal arms	2

11. 202D 附件 Accessories

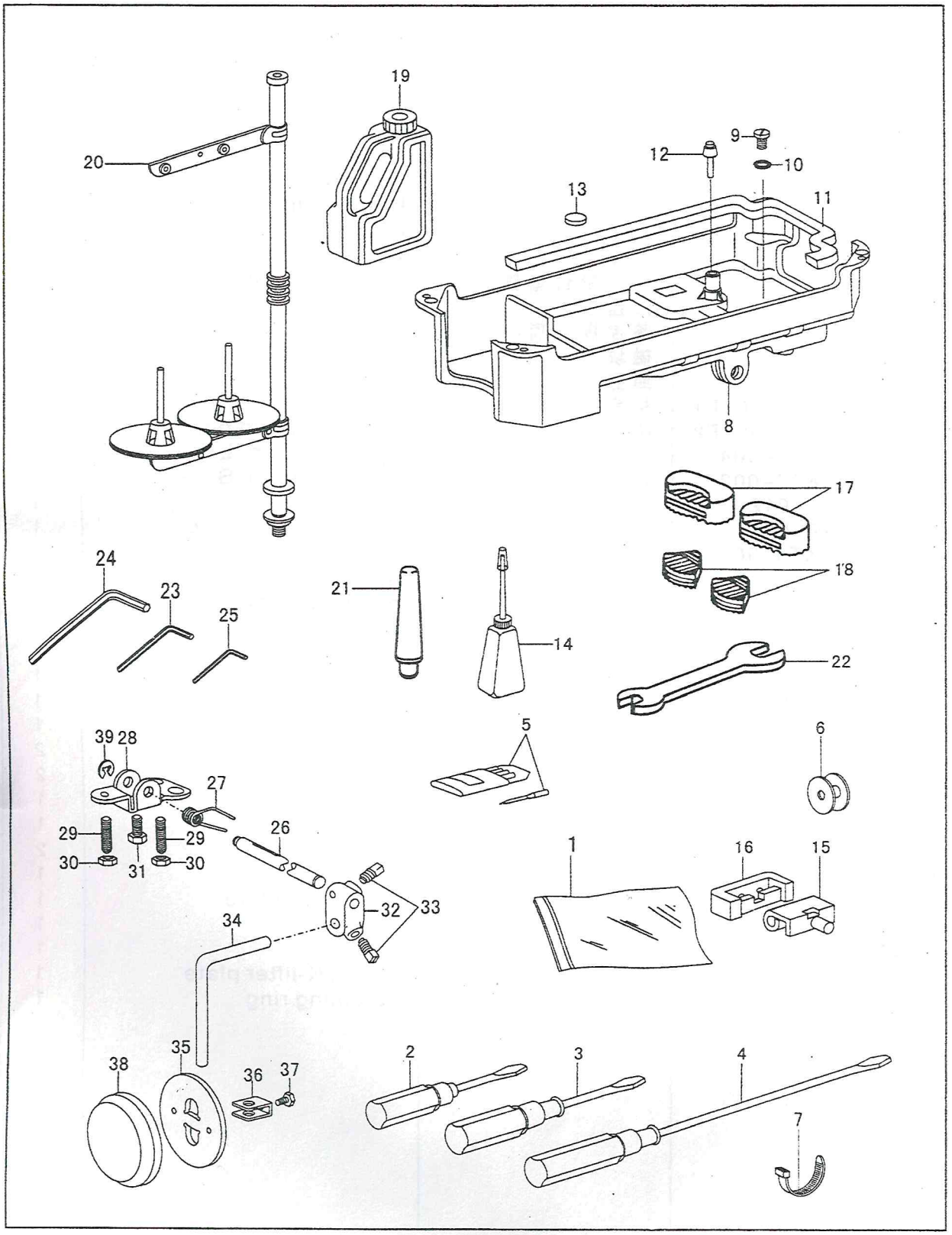

11. 202D 附件 Accessories

序号 No.	图 号 Part Number	零件名称 Name		数量 Qt. 6202D
1	33TF-010	零件袋	Accessory bag	1
2	33TF-014	一字开刀（小）	Screw driver, S	1
3	33TF-013	一字开刀（中）	Screw driver, M	1
4	33TF-012	一字开刀（大）	Screw driver, L	1
5		机针	Needle	4
6	24WF2-001	梭芯	Bobbin	3
7	129WF1-016	捆扎带	Bobbin thread winder assy.	3
8	122WF7-005	油盘	Screw	1
9	22T9-001A2	放油螺钉	Washer	1
10	22T9-001A3	放油螺钉垫圈	Belt guard assy.	1
11	2KT9-008	油盘垫	Screw	1
12	4WF5-002	膝控提升顶杆	Washer	1
13	22T9-012	磁块	Screw	1
14	33TF-011	油壶	Oil pot	1
15	22T9-007F1	机壳铰链	Head hinge	2
16	22T9-007F2	机壳铰链套	Cushion, head hinge	2
17	1KT5-004	机头防震垫块（大）	Head cushion, L	2
18	1KT5-003	机头防震垫块（小）	Head cushion, S	2
19	1F-012	油箱	Oil tank	1
20	4F-007	线架组件	Thread stand assy.	1
21	1KT5-007	机头撑杆	Head rest	1
22		呆扳手	Wrench	1
23		2mm内六角扳手	Wrench, 2mm	1
24		3mm内六角扳手	Wrench, 3mm	1
25		2.5mm内六角扳手	V-belt	1
26	22T9-001A6	膝控铰链轴	Lifter shaft	1
27	22T9-001A7	膝控复位弹簧	Spring	1
28	22T9-001A8	膝控限位架	Bracket	1
29	22T9-001A9	膝控限位调节螺钉	Adjusting screw	2
30	22T9-001A10	调节螺母	Adjusting nut	2
31	22T9-036	膝控限位架螺钉	Screw	1
32	22T9-003B3	碰块弯杆接头	Bracket	1
33		碰块弯杆接头螺钉	Screw	2
34	22T9-003B2	膝控碰块弯杆	Lifter bar	1
35	22T9-003B5	膝控碰块	Knee lifter plate	1
36	22T9-003B6	碰块架	Stopper	1
37	22T9-003B7	碰块架螺钉	Screw	1
38	22T9-003B8	碰块垫	Cover, K-lifter plate	1
39		开口挡圈	Retaining ring	1